SILVER LAKE
BRANCH LIBRARY

SILVER LAKE, CALIFORNIA

SAMPLE

CHANNEL GLASS SCHEDULE

GLASS PROFILE: P26/60/7 (P23/60/7 & P33/60/7 WHERE REQUIRED)

- CLEAR WITH GREEN CAST CHANNEL TEXTURE TO BE 504 ROUGH CAST. AZUR ON EXTERIOR CHANNEL SURFASCE #2, LOW-E ON INTERIOR CHANNEL SURFACE #3
- CLEAR WITH GREEN CAST CHANNEL TEXTURE TO BE 504 CLARISSIMO. AZUR ON EXTERIOR C[illegible] SURFASCE #2, LOW-E ON INTERIOR [illegible]FACE #3
- TEMPERED CLEAR WITH GREEN CA[illegible] TEXTURE TO BE 504 ROUGH CAST. [illegible] EXTERIOR CHANNEL SURFASCE #2, LOW-E ON I[illegible]OR CHANNEL SURFACE #3
- TEMPERED CLEAR WITH GREEN CAST [illegible]NNEL TEXTURE TO BE 504 CLARISSIMO. AZ[illegible]RIOR CHANNEL SURFASCE #2, LOW-E ON INTE[illegible] CHANNEL SURFACE #3

GLASS SCHEDULE

- 1" TH[illegible] ARE [illegible]O VISION GLAZIN[illegible] (OUTE[illegible] LITE: A[illegible]. SO[illegible]AN 60 VISION G[illegible]S WITH A ½" [illegible]PACE; INE[illegible]D LI[illegible]" THK. CLEAR GL[illegible]
- THICK[illegible] VISION GLAZIN[illegible]
- DENOTES TEMPERED GLASS AS REQUIRED

ALUMINUM FRAME FINISH

TYPE: ANODIZED

COLOR: CLEAR

ALUMINUM FRAME SYSTEM

U.S. ALUMINUM	SERIES:OS451 (2 X 4 1/2" OFFSET)
SERVICE ALUMINUM	SERIES:200 (CASEMENT & AWNING)
BENDHEIM	SERIES:SF60

ABBREVIATIONS

A.F.F.	~	ABOVE FINISH FLOOR
B.O.M.	~	BOTTOM OF MULLION
℄	~	CENTER LINE
DLO	~	DAYLIGHT OPENING
F.F.	~	FINISH FLOOR
F.O.C.	~	FACE OF CONCRETE
F.O.M.	~	FACE OF MULLION
F.V.	~	FIELD VERIFY
MEZZ.	~	MEZZANINE FLOOR
N.F.D.	~	NET FRAME DIMENSION
R.C.P.	~	RECESSED CONCRETE PANEL
R.O.	~	ROUGH OPENING
S.O.M.	~	SIDE OF MULLION
T.O.M.	~	TOP OF MULLION
T.O.P.	~	TOP OF PARAPET
W.R.O.	~	WINDOW ROUGH OPENING

NOTE:

ELEVATIONS UPDATED USING THE LATEST STEEL FABRICATION DRAWINGS

REVISIONS	BY
△	
△	
△	
△	
△	

BMR
DRAFTING SERVICE
SINCE 1988
23846 SUNNYMEAD BLVD.
SUITE #6
MORENO VALLEY, CA 92553
B: (951) 243-7614
F: (951) 243-7673

HARRIS GLASS CO.
6918 SOUTH ATLANTIC AVENUE
BELL, CA 90201

JOB NAME: SILVER LAKE BRANCH LIBRARY
ARCHITECT: M2A
SHEET DESCRIPTION: COVER SHEET

DATE: 9/10/07
SCALE:
DRAWN: CTB
JOB NO: 066-07
SHEET NO: 1.01

1 REFLECTED GLASS FLOOR PLAN
REF. ARCH'L -

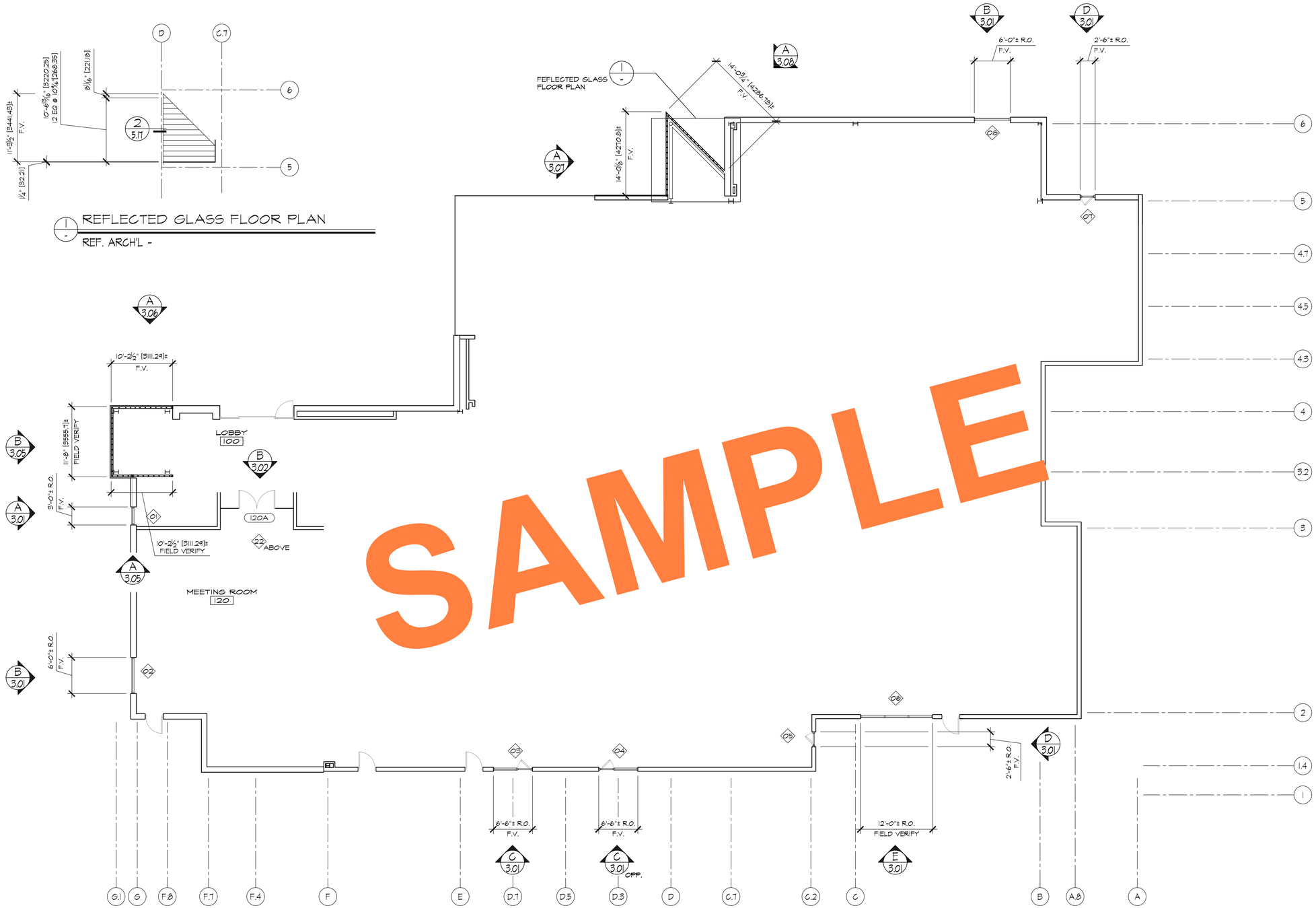

PARTIAL FLOOR PLAN
REF. ARCH'L - A2.2

N

SAMPLE

REVISIONS	BY
△	
△	
△	
△	
△	

BMR
DRAFTING SERVICE
SINCE 1988
23846 SUNNYMEAD BLVD.
SUITE #6
MORENO VALLEY, CA 92553
B: (951) 243-7614
F: (951) 243-7673

HARRIS GLASS CO.
6918 SOUTH ATLANTIC AVENUE
BELL, CA 90201

JOB NAME: SILVER LAKE BRANCH LIBRARY
ARCHITECT: M2A
SHEET DESCRIPTION: FLOOR PLAN

DATE: 9/10/07
SCALE: 1/8"=1'-0"
DRAWN: CTB
JOB NO: 066-07
SHEET NO: 2.01

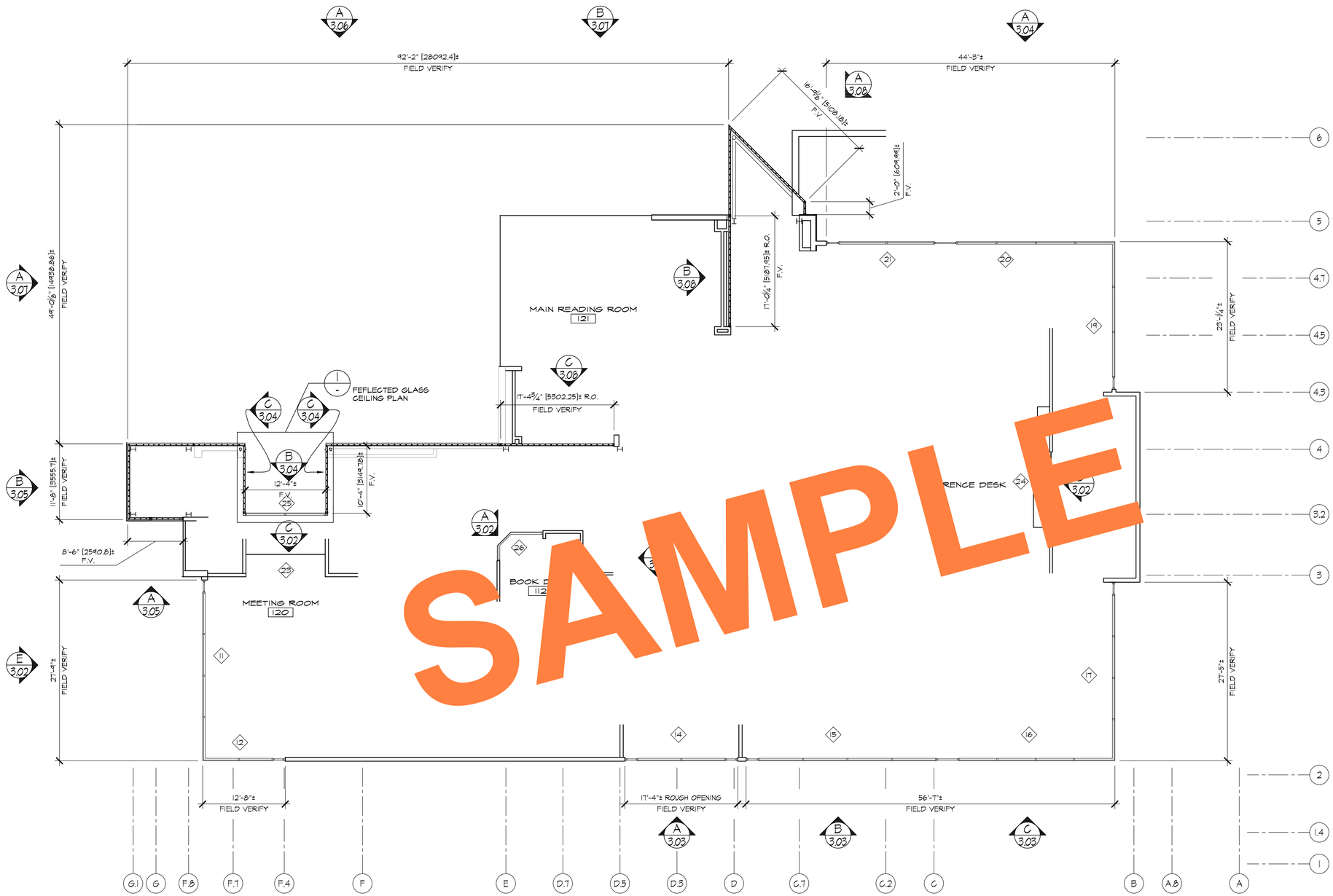

PARTIAL FLOOR PLAN @ EL 112'-0"

REF. ARCH'L - A2.3 (SIM)

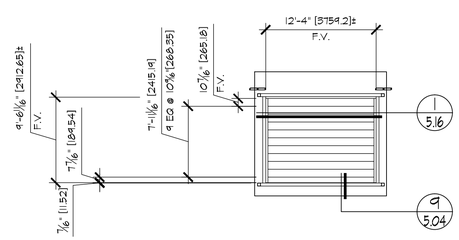

REFLECTED GLASS CEILING PLAN

REF. ARCH'L - A2.3

REVISIONS	BY
△	
△	
△	
△	
△	

BMR DRAFTING SERVICE SINCE 1988
23846 SUNNYMEAD BLVD.
SUITE #6
MORENO VALLEY, CA 92553
B: (951) 243-7614
F: (951) 243-7673

HARRIS GLASS CO.
6918 SOUTH ATLANTIC AVENUE
BELL, CA 90201

JOB NAME: SILVER LAKE BRANCH LIBRARY
ARCHITECT: M2A
SHEET DESCRIPTION: FLOOR PLAN
DATE: 9/10/07
SCALE: 1/8"=1'-0"
DRAWN: CTB
JOB NO: 066-07
SHEET NO: 2.02

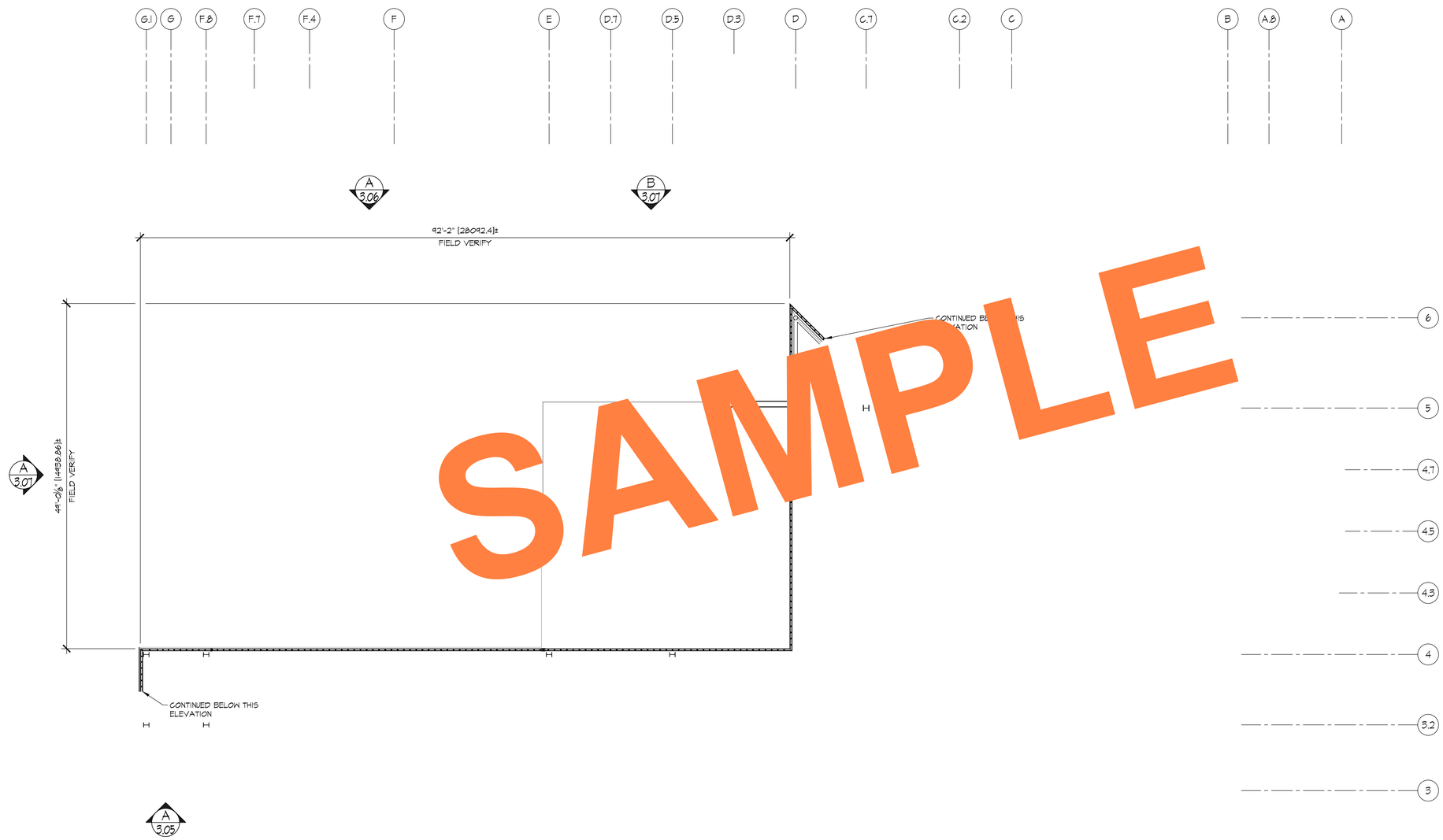

SAMPLE

PARTIAL FLOOR PLAN @ EL 123'-0"

REF. ARCH'L - A2.3 (SIM)

N

REVISIONS	BY
△	
△	
△	
△	
△	

BMR
DRAFTING SERVICE
SINCE 1988
23846 SUNNYMEAD BLVD.
SUITE #6
MORENO VALLEY, CA 92553
B: (951) 243-7614
F: (951) 243-7673

HARRIS GLASS CO.
6918 SOUTH ATLANTIC AVENUE
BELL, CA 90201

JOB NAME: SILVER LAKE BRANCH LIBRARY

ARCHITECT: M2A

SHEET DESCRIPTION: FLOOR PLAN

DATE: 2-20-08

SCALE: 1/8"=1'-0"

DRAWN: CTB

JOB NO: 066-07

SHEET NO: 2.03

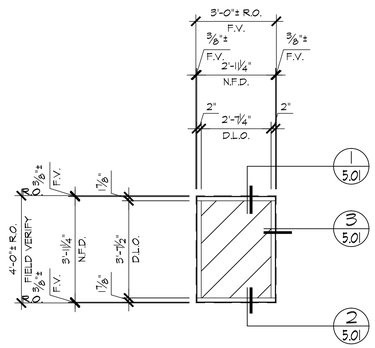

A 3.01 ELEVATION (05451) 01

LOCATION

1st. FLR. ~ 1 REQ'D (NORTH)

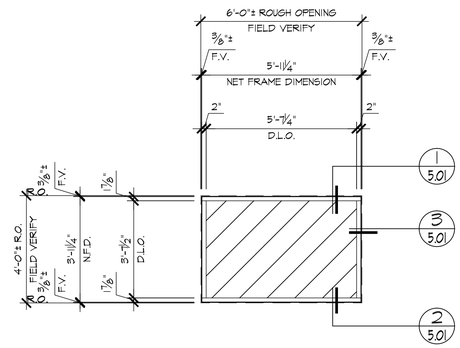

B 3.01 ELEVATION (05451) 02

LOCATION

1st. FLR. ~ 1 REQ'D (NORTH)

1st. FLR. ~ 1 REQ'D (EAST)

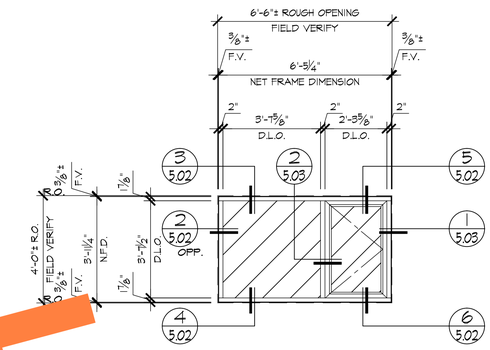

ELEVATION (05451; 200) 03 04

LOCATION

1st. FLR. ~ 1 REQ'D (WEST)

1st. FL[illegible] REQ'D/OPP. (WEST)

SAMPLE

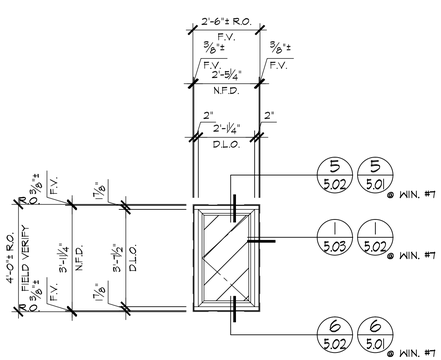

D 3.01 ELEVATION (05451; 200) 05 07

LOCATION

1st. FLR. ~ 1 REQ'D (SOUTH)

1st. FLR. ~ 1 REQ'D (EAST)

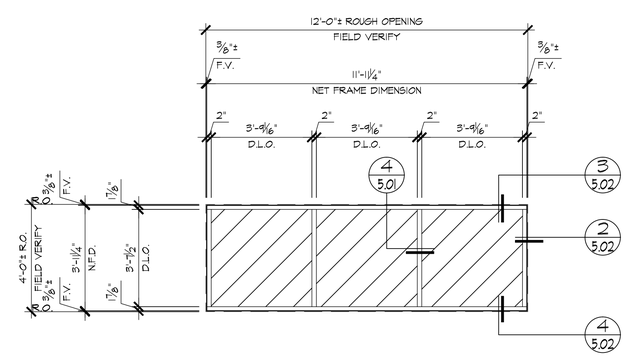

E 3.01 ELEVATION (05451) 06

LOCATION

1st. FLR. ~ 1 REQ'D (WEST)

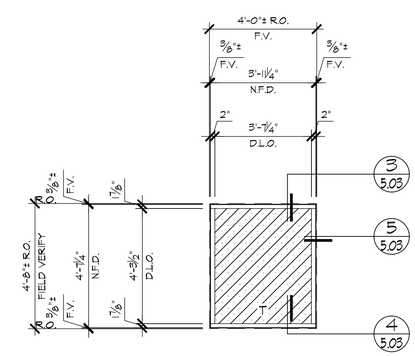

F 3.01 ELEVATION (05451) 27

LOCATION ~ INTERIOR

1 REQ'D (BOOK DROP, 112)

REVISIONS	BY
△	
△	
△	
△	
△	

BMR
DRAFTING SERVICE
SINCE 1988
23846 SUNNYMEAD BLVD.
SUITE #6
MORENO VALLEY, CA 92553
B: (951) 243-7614
F: (951) 243-7673

HARRIS GLASS CO.
6918 SOUTH ATLANTIC AVENUE
BELL, CA 90201

JOB NAME: SILVER LAKE BRANCH LIBRARY

ARCHITECT: M2A

SHEET DESCRIPTION: ELEVATIONS

DATE: 9/10/07

SCALE: 3/8"=1'-0"

DRAWN: CTB

JOB NO: 066-07

SHEET NO: 3.01

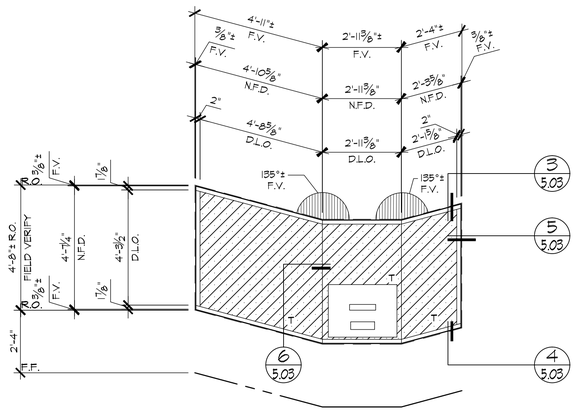

A 3.02 ELEVATION (OS450) 26

LOCATION ~ INTERIOR

1 REQ'D (BOOK DROP, 112)

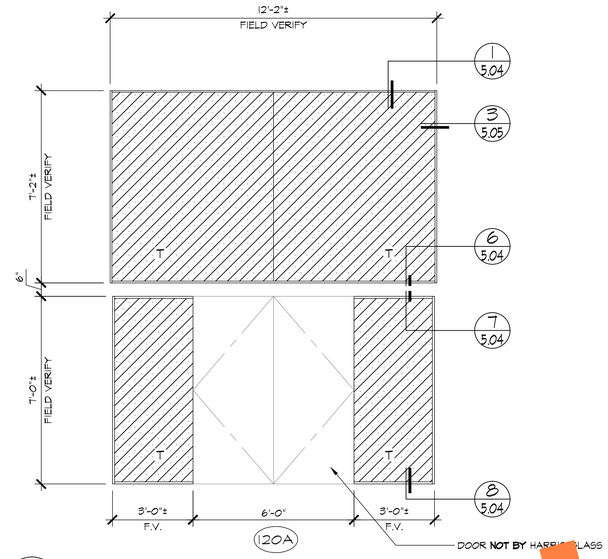

B 3.02 ELEVATION (3/4" CENTER SASH) 22

LOCATION ~ INTERIOR

1 REQ'D (MEETING ROOM, 120)

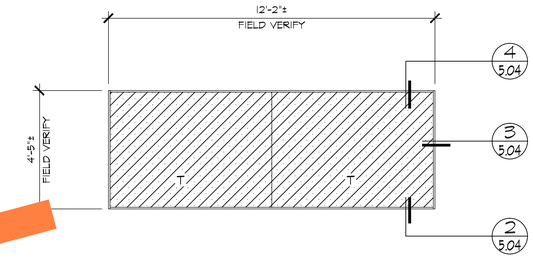

C 3.02 ELEVATION (3/4" CENTER SASH) 23

LOCATION ~ INTERIOR

1 REQ'D @ EL. 112'-0" (ABOVE LOBBY CANOPY)

SAMPLE

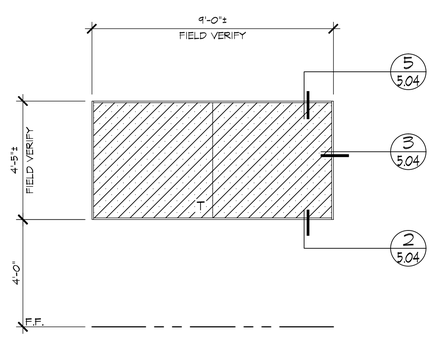

D 3.02 ELEVATION (3/4" CENTER SASH) 24

LOCATION ~ INTERIOR

1 REQ'D (REFERENCE DESK)

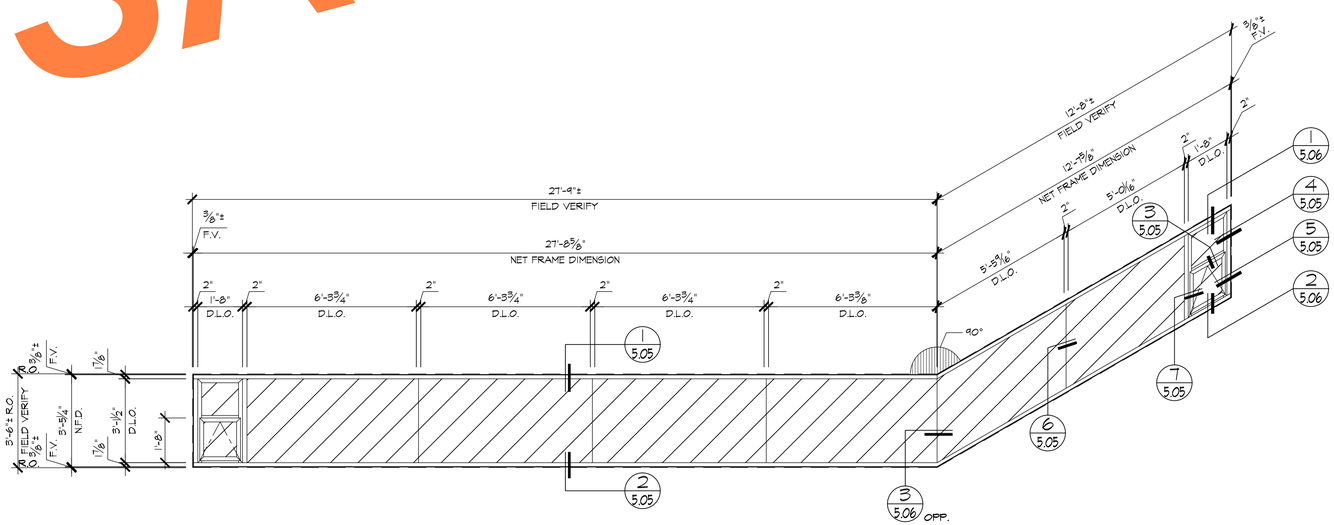

E 3.02 ELEVATION (OS451; 200) 11 12

LOCATION

CLERESTORY ~ 1 REQ'D (NORTH)

REVISIONS	BY
△	
△	
△	
△	
△	

BMR
DRAFTING SERVICE
SINCE 1988
23846 SUNNYMEAD BLVD.
SUITE #6
MORENO VALLEY, CA 92553
B: (951) 243-7614
F: (951) 243-7673

HARRIS GLASS CO.
6918 SOUTH ATLANTIC AVENUE
BELL, CA 90201

JOB NAME: SILVER LAKE BRANCH LIBRARY
ARCHITECT: M2A
SHEET DESCRIPTION: ELEVATIONS

DATE: 9/10/07
SCALE: 3/8"=1'-0"
DRAWN: CTB
JOB NO: 066-07
SHEET NO: 3.02

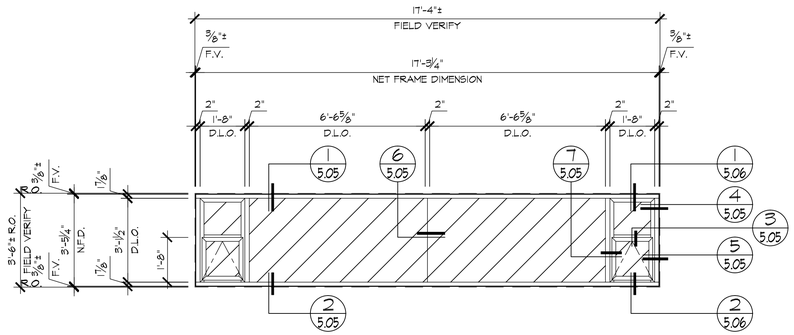

A 3.03 ELEVATION (05451; 200) 14

LOCATION

CLERESTORY ~ 1 REQ'D (WEST)

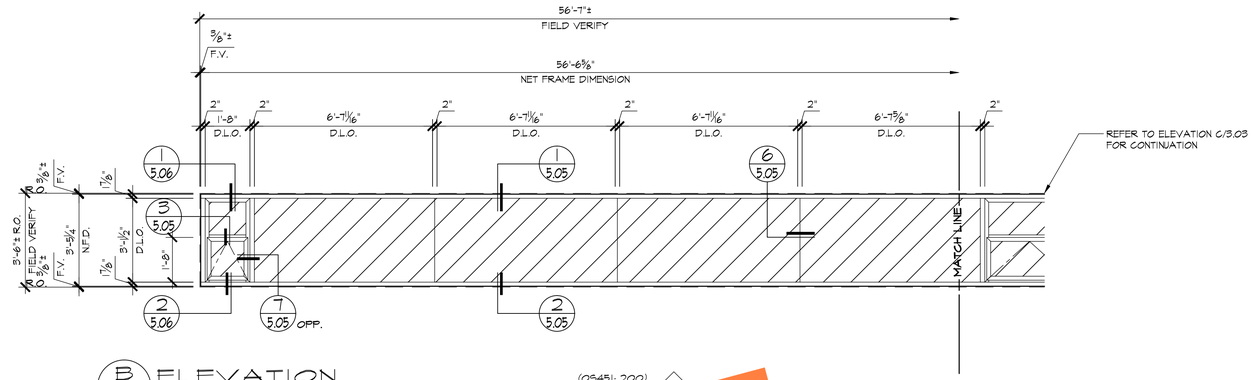

B 3.03 ELEVATION (05451; 200) 15

LOCATION

CLERESTORY ~ 1 REQ'D (WEST)

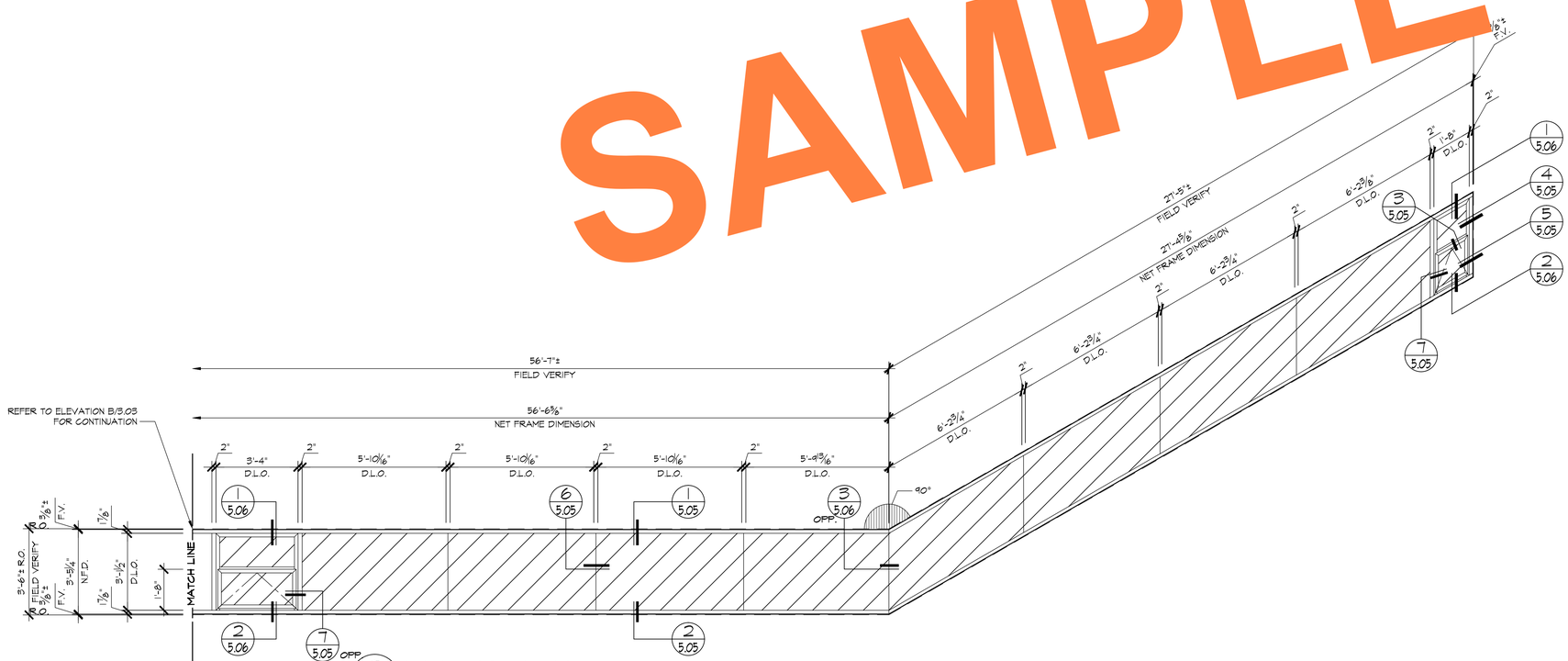

C 3.03 ELEVATION (05451; 200) 16 17

LOCATION

CLERESTORY ~ 1 REQ'D (WEST)

SAMPLE

REVISIONS	BY
△	
△	
△	
△	
△	

BMR
DRAFTING SERVICE
SINCE 1988
23846 SUNNYMEAD BLVD.
SUITE #6
MORENO VALLEY, CA 92553
B: (951) 243-7614
F: (951) 243-7673

HARRIS GLASS CO.
6918 SOUTH ATLANTIC AVENUE
BELL, CA 90201

JOB NAME: SILVER LAKE BRANCH LIBRARY
ARCHITECT: M2A
SHEET DESCRIPTION: ELEVATIONS

DATE: 9/10/07
SCALE: 3/8"=1'-0"
DRAWN: CTB
JOB NO: 066-07
SHEET NO: 3.03

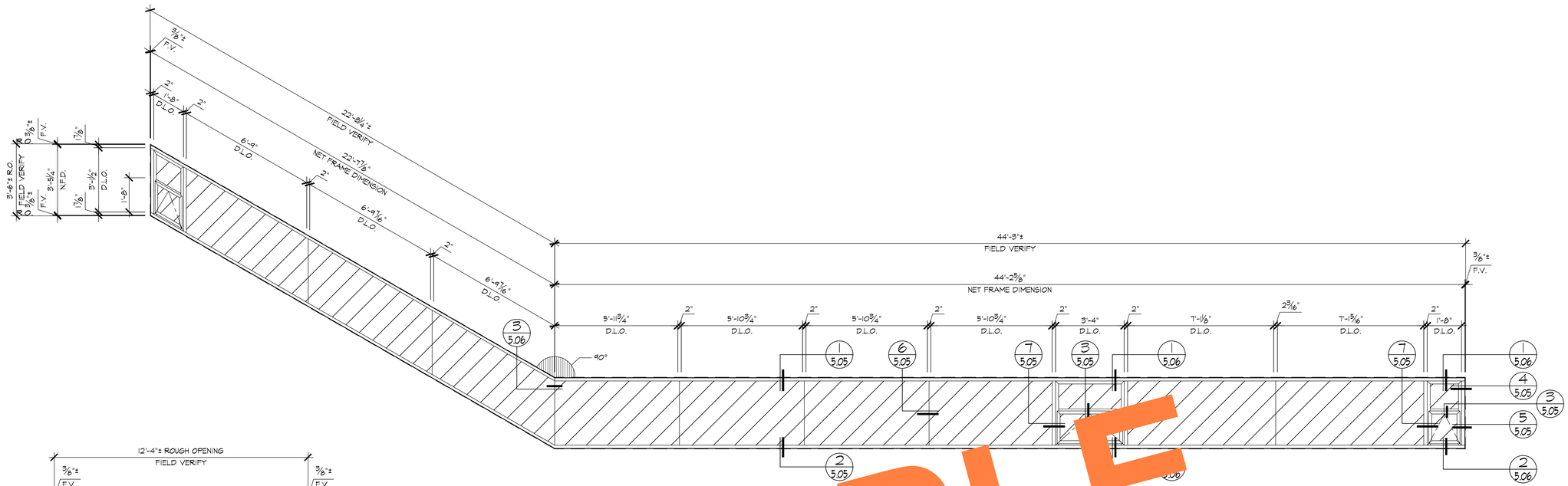

A ELEVATION (05451; 200) 20 21

LOCATION

(EAST)

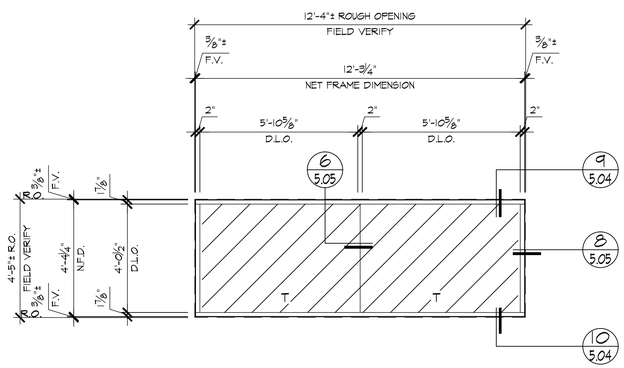

B 3.04 ELEVATION (05451)

LOCATION

CLERESTORY ABOVE LOBBY CANOPY ~ 1 REQ'D (EAST)

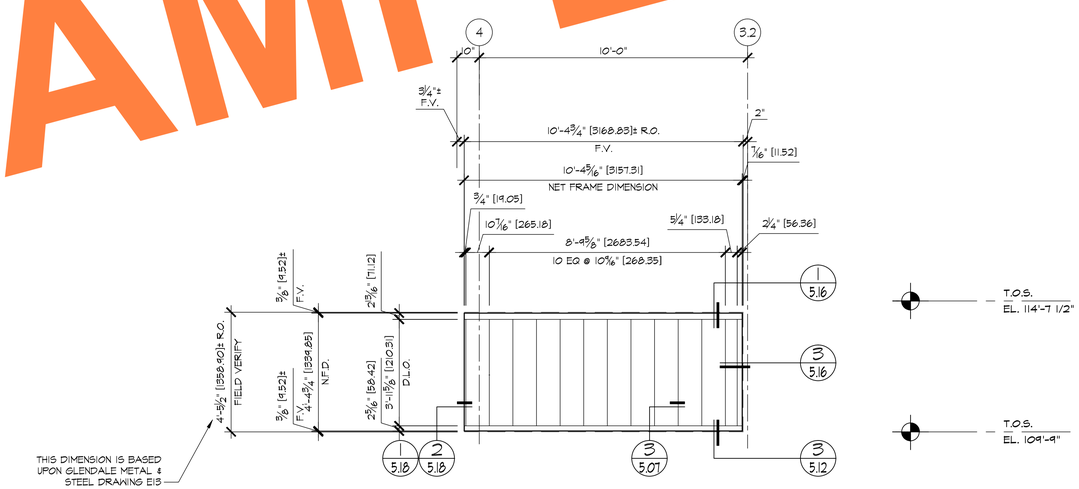

C 3.04 ELEVATION (CHANNEL GLASS SYSTEM)

LOCATION

1st. FLR. ~ 1 REQ'D (NORTH)
1st. FLR. ~ 1 REQ'D (SOUTH)

SAMPLE

REVISIONS	BY
△	
△	
△	
△	
△	

BMR
DRAFTING SERVICE
SINCE 1988
23846 SUNNYMEAD BLVD.
SUITE #6
MORENO VALLEY, CA 92553
B: (951) 243-7614
F: (951) 243-7673

HARRIS GLASS CO.
6918 SOUTH ATLANTIC AVENUE
BELL, CA 90201

JOB NAME: SILVER LAKE BRANCH LIBRARY
ARCHITECT: M2A
SHEET DESCRIPTION: ELEVATIONS

DATE: 9/10/07
SCALE: 3/8"=1'-0"
DRAWN: CTB
JOB NO: 066-07
SHEET NO: 3.04

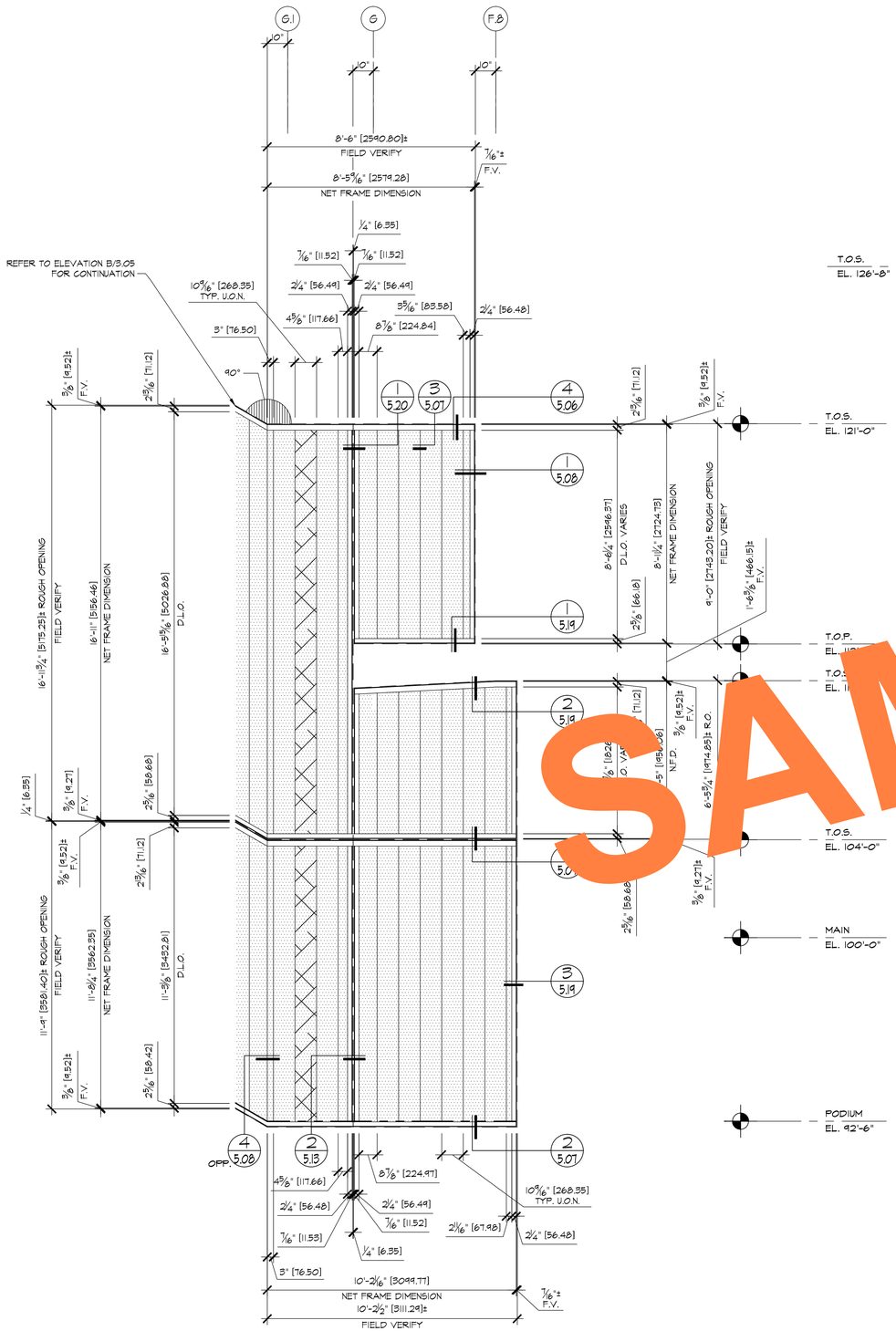

A 3.05 ELEVATION (CHANNEL GLASS SYSTEM)
LOCATION
1st. FLR. ~ 1 REQ'D (WEST)

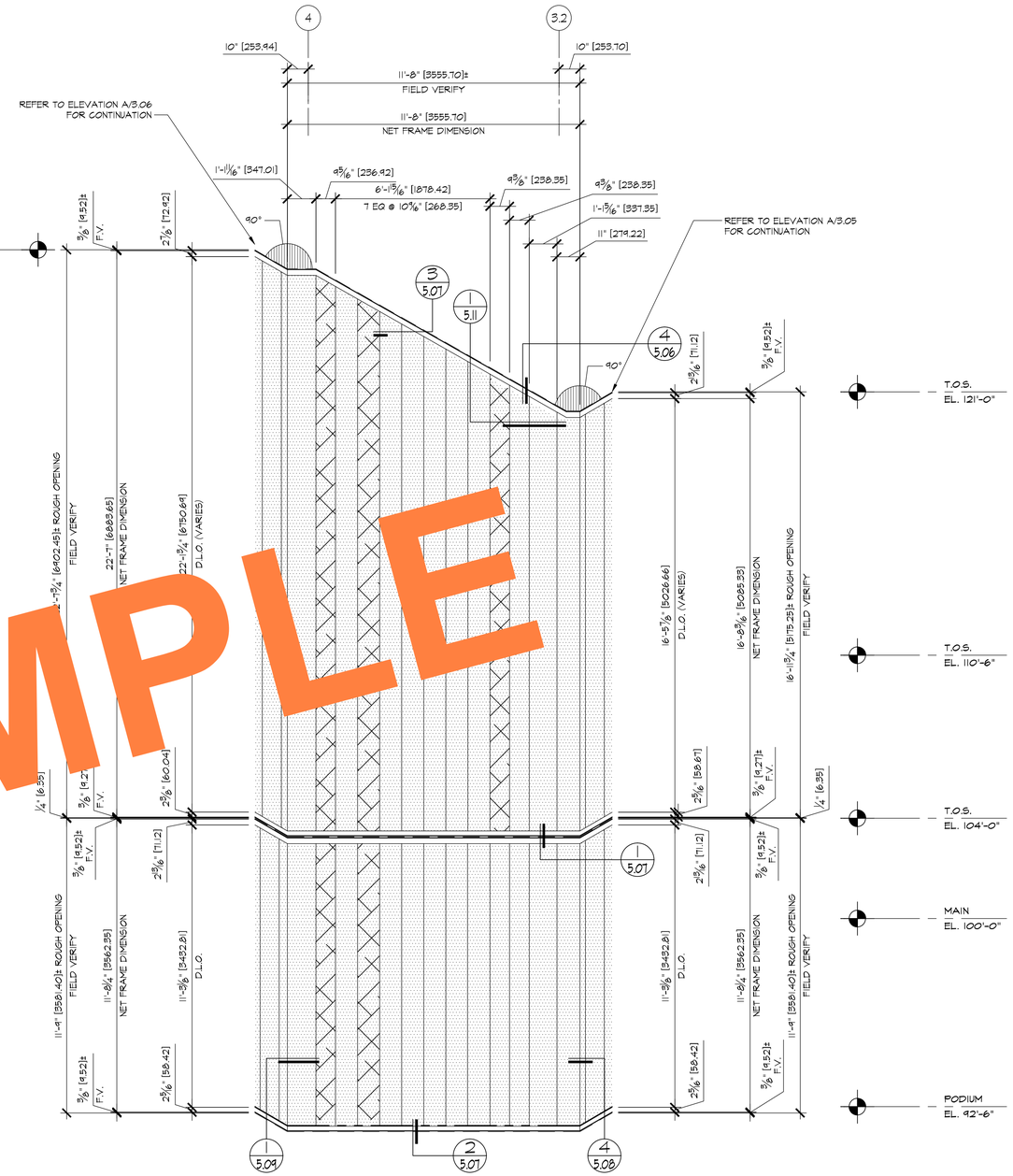

B 3.05 ELEVATION (CHANNEL GLASS SYSTEM)
LOCATION
1st. FLR. ~ 1 REQ'D (NORTH)

SAMPLE

REVISIONS	BY
△	
△	
△	
△	
△	

BMR
DRAFTING SERVICE
SINCE 1988
23846 SUNNYMEAD BLVD.
SUITE #6
MORENO VALLEY, CA 92553
B: (951) 243-7614
F: (951) 243-7673

HARRIS GLASS CO.
6918 SOUTH ATLANTIC AVENUE
BELL, CA 90201

JOB NAME: SILVER LAKE BRANCH LIBRARY
ARCHITECT: M2A
SHEET DESCRIPTION: ELEVATIONS
DATE: 9/10/07
SCALE: 3/8"=1'-0"
DRAWN: CTB
JOB NO: 066-07
SHEET NO: 3.05

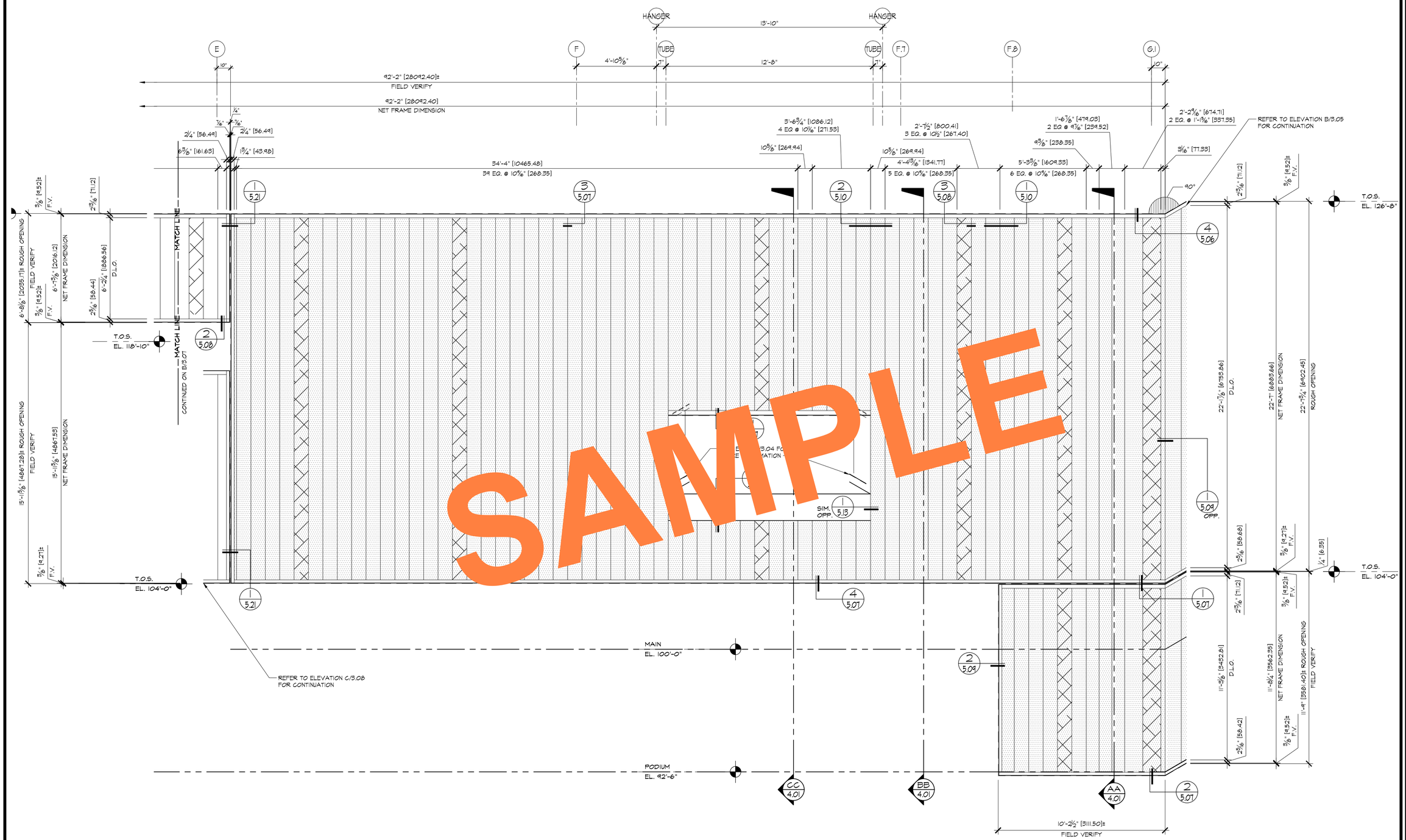

A 3.06 ELEVATION (CHANNEL GLASS SYSTEM)
LOCATION
1st. FLR. ~ 1 REQ'D (EAST)

REVISIONS	BY
△	
△	
△	
△	
△	

BMR
DRAFTING SERVICE
SINCE 1988
23846 SUNNYMEAD BLVD.
SUITE #6
MORENO VALLEY, CA 92553
B: (951) 243-7614
F: (951) 243-7673

HARRIS GLASS CO.
6918 SOUTH ATLANTIC AVENUE
BELL, CA 90201

JOB NAME: SILVER LAKE BRANCH LIBRARY
ARCHITECT: M2A
SHEET DESCRIPTION: ELEVATIONS
DATE: 9/10/07
SCALE: 3/8"=1'-0"
DRAWN: CTB
JOB NO: 066-07
SHEET NO: 3.06

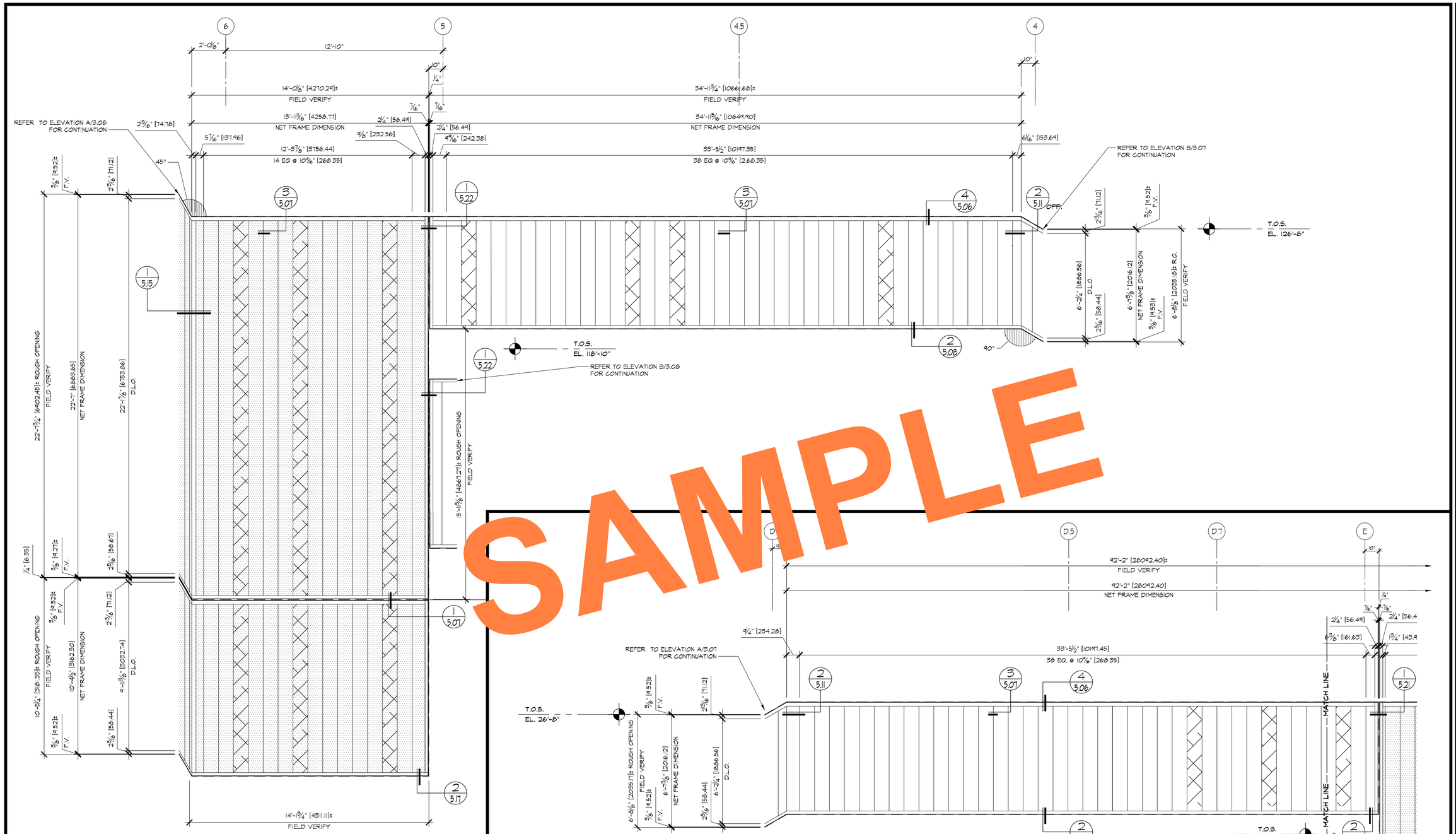

A 3.07 ELEVATION (CHANNEL GLASS SYSTEM)
LOCATION
1st. FLR. ~ 1 REQ'D (NORTH)

B 3.07 ELEVATION (CHANNEL GLASS SYSTEM)
LOCATION
1st. FLR. ~ 1 REQ'D (EAST)

REVISIONS	BY
△	
△	
△	
△	
△	

BMR
DRAFTING SERVICE
SINCE 1988
23846 SUNNYMEAD BLVD.
SUITE #6
MORENO VALLEY, CA 92553
B: (951) 243-7614
F: (951) 243-7673

HARRIS GLASS CO.
6918 SOUTH ATLANTIC AVENUE
BELL, CA 90201

JOB NAME: SILVER LAKE BRANCH LIBRARY
ARCHITECT: M2A
SHEET DESCRIPTION: ELEVATIONS

DATE: 9/10/07
SCALE: 3/8"=1'-0"
DRAWN: CTB
JOB NO: 066-07
SHEET NO: 3.07

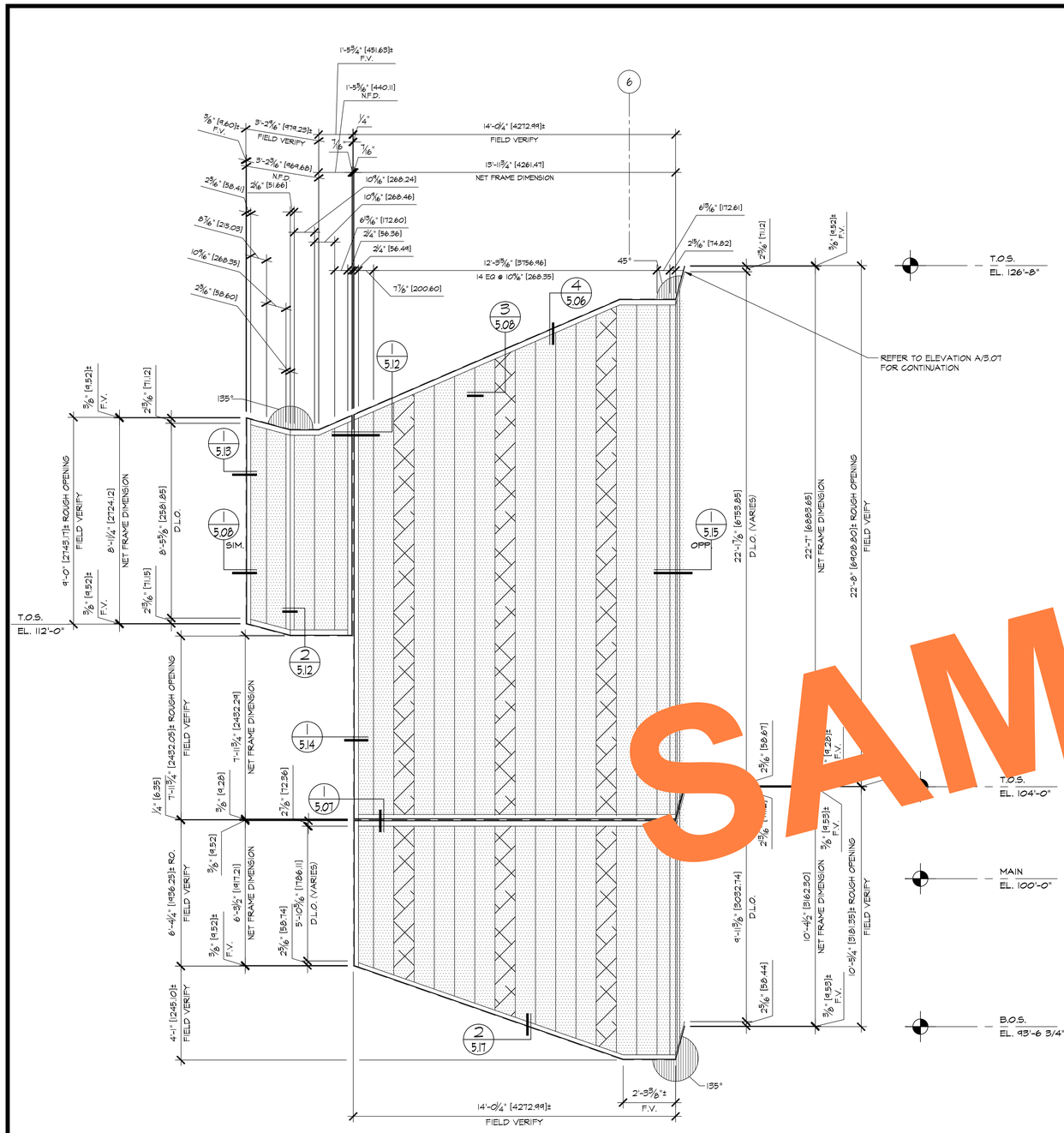

A 3.08 ELEVATION (CHANNEL GLASS SYSTEM)
LOCATION
1st. FLR. ~ 1 REQ'D (EAST)

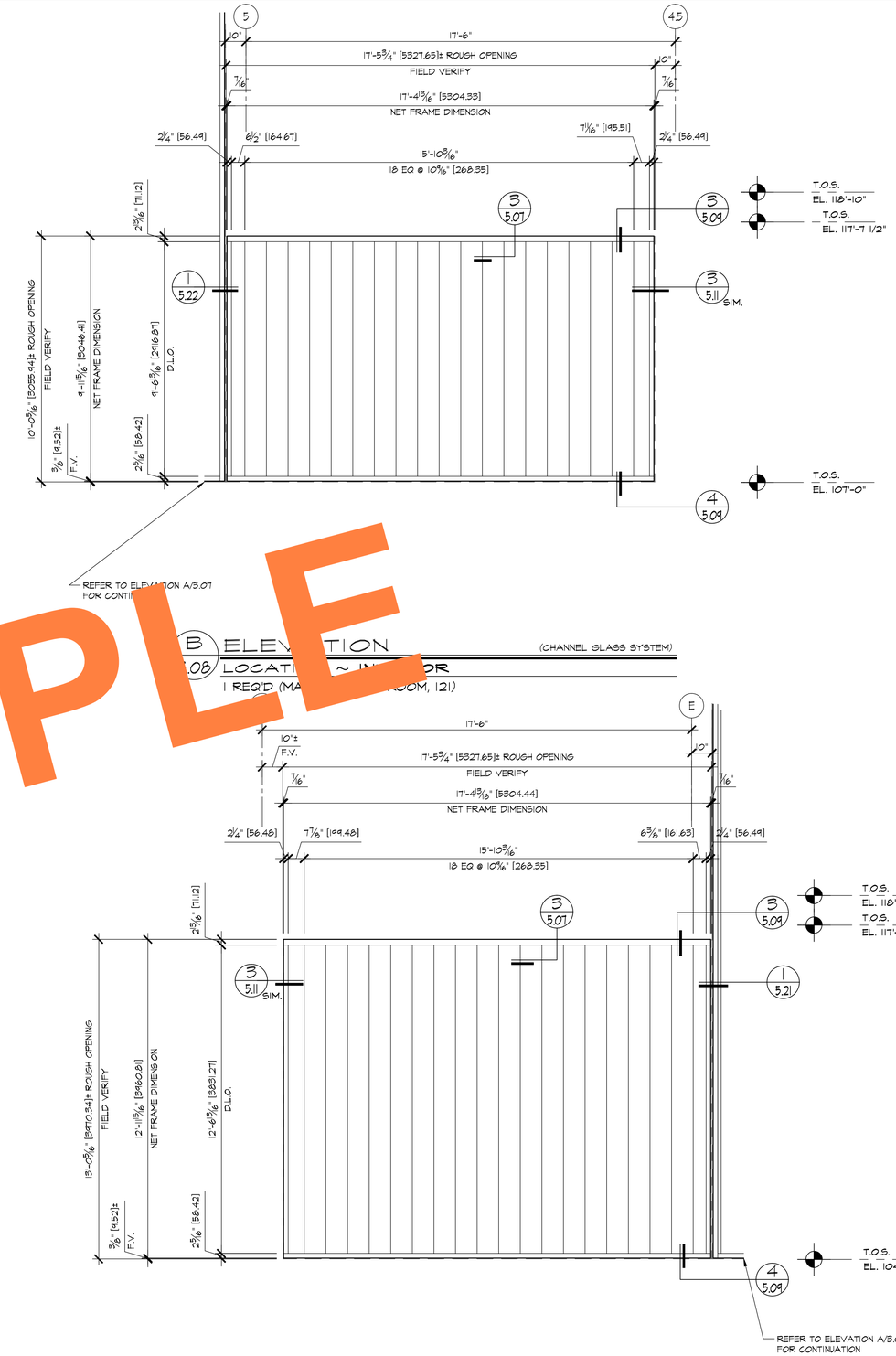

B 3.08 ELEVATION (CHANNEL GLASS SYSTEM)
LOCATION ~ INTERIOR
1 REQ'D (MAIN READING ROOM, 121)

C 3.08 ELEVATION (CHANNEL GLASS SYSTEM)
LOCATION ~ INTERIOR
1 REQ'D (MAIN READING ROOM, 121)

SAMPLE

REVISIONS	BY
△	
△	
△	
△	
△	

BMR
DRAFTING SERVICE
SINCE 1988
23846 SUNNYMEAD BLVD.
SUITE #6
MORENO VALLEY, CA 92553
B: (951) 243-7614
F: (951) 243-7673

HARRIS GLASS CO.
6918 SOUTH ATLANTIC AVENUE
BELL, CA 90201

JOB NAME: SILVER LAKE BRANCH LIBRARY
ARCHITECT: M2A
SHEET DESCRIPTION: ELEVATIONS

DATE: 9/10/07
SCALE: 3/8"=1'-0"
DRAWN: CTB
JOB NO: 066-07
SHEET NO: 3.08

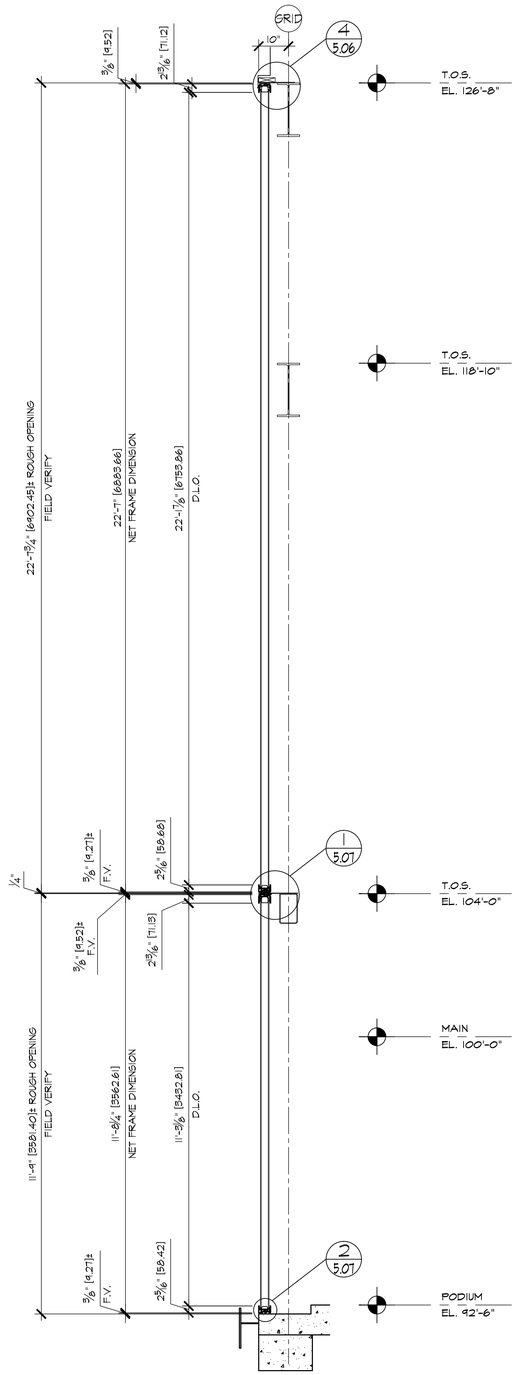

AA 4.01 WALL SECTION
ARCH'L: 1/A3.6

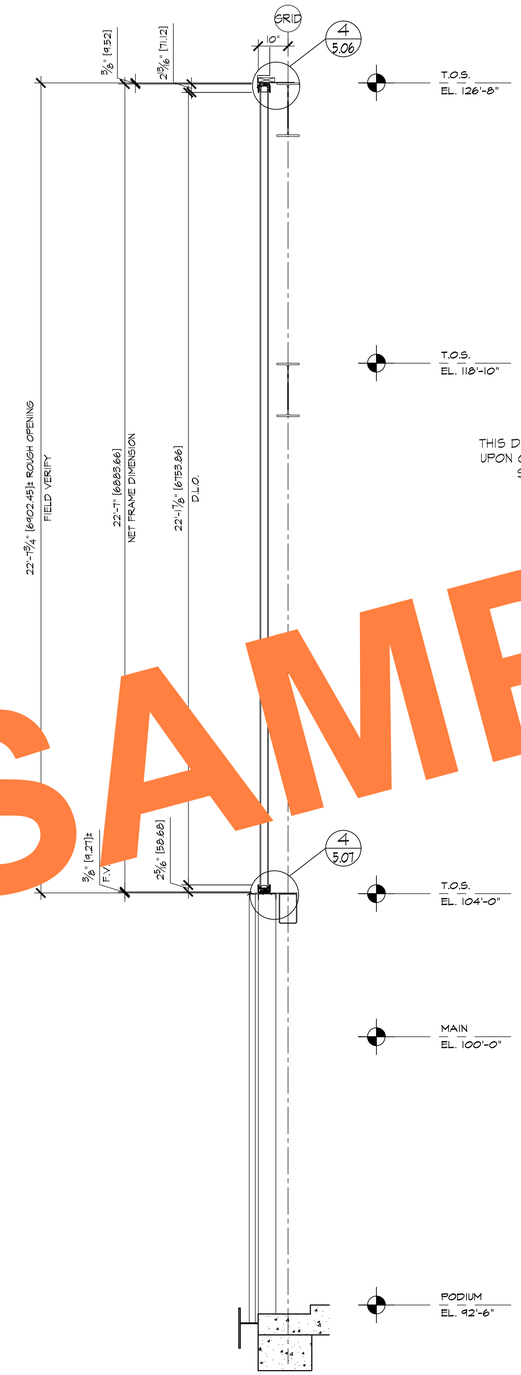

BB 4.01 WALL SECTION
ARCH'L: 2/A3.6

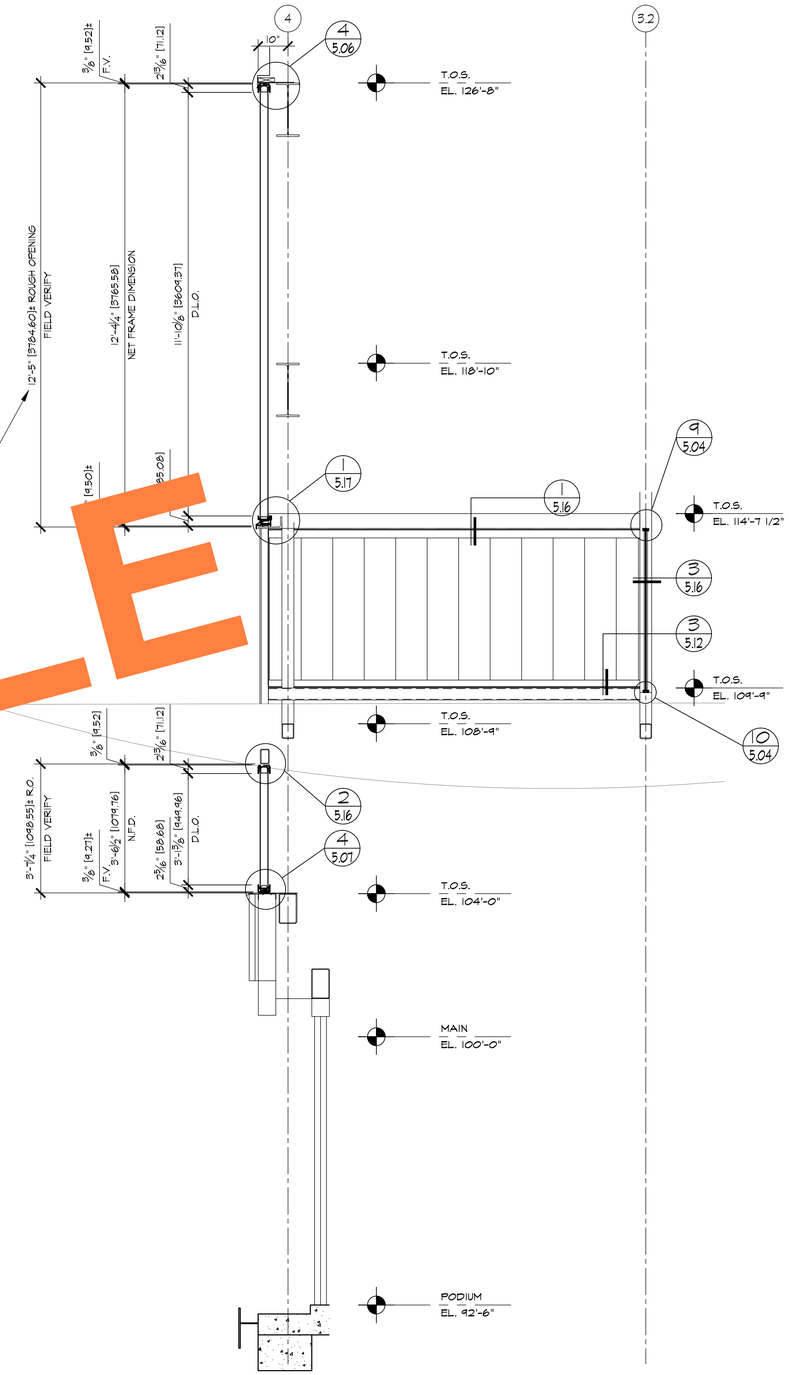

CC 4.01 WALL SECTION
ARCH'L: 3/A3.6

SAMPLE

REVISIONS	BY
△	
△	
△	
△	
△	

BMR
DRAFTING SERVICE
SINCE 1988
23846 SUNNYMEAD BLVD.
SUITE #6
MORENO VALLEY, CA 92553
B: (951) 243-7614
F: (951) 243-7673

HARRIS GLASS CO.
6918 SOUTH ATLANTIC AVENUE
BELL, CA 90201

JOB NAME: SILVER LAKE BRANCH LIBRARY
ARCHITECT: M2A
SHEET DESCRIPTION: WALL SECTIONS

DATE: 9/10/07
SCALE: 1/2"=1'-0"
DRAWN: CTB
JOB NO: 066-07
SHEET NO: 4.01

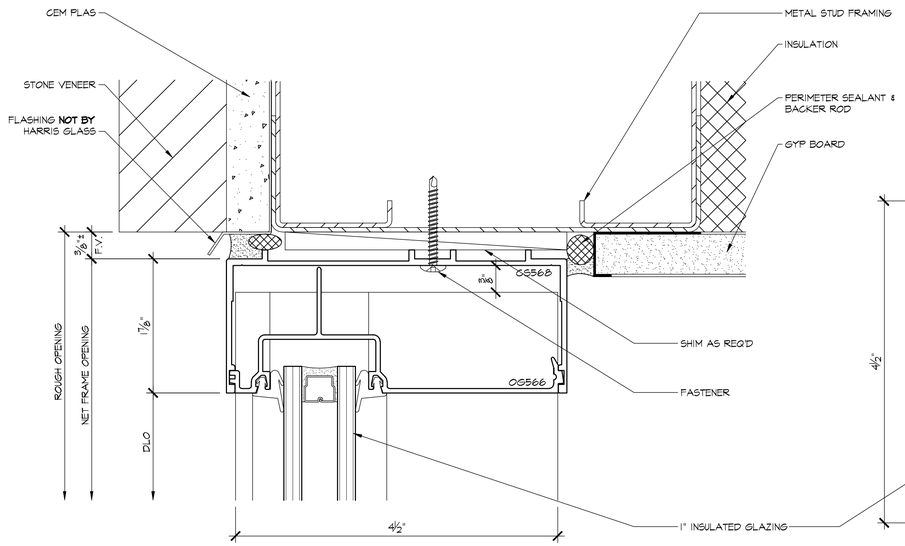

1 / 5.01 HEAD
ARCH'L: 7/A7.6

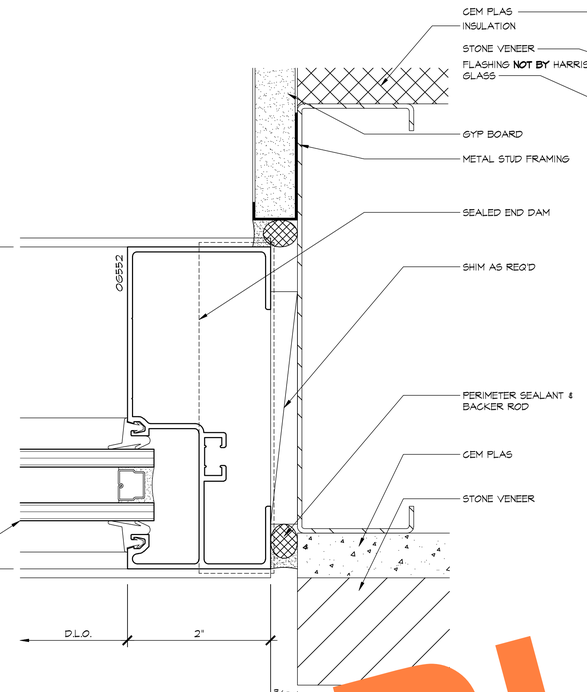

3 / 5.01 HEAD
ARCH'L: 7/A7.6

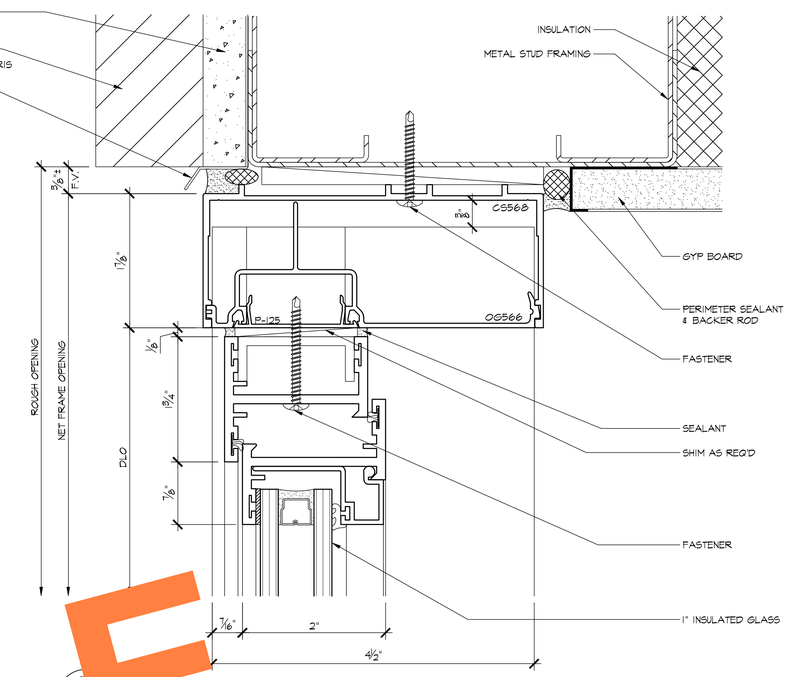

5 / 5.01 HEAD
ARCH'L: 7/A7.6

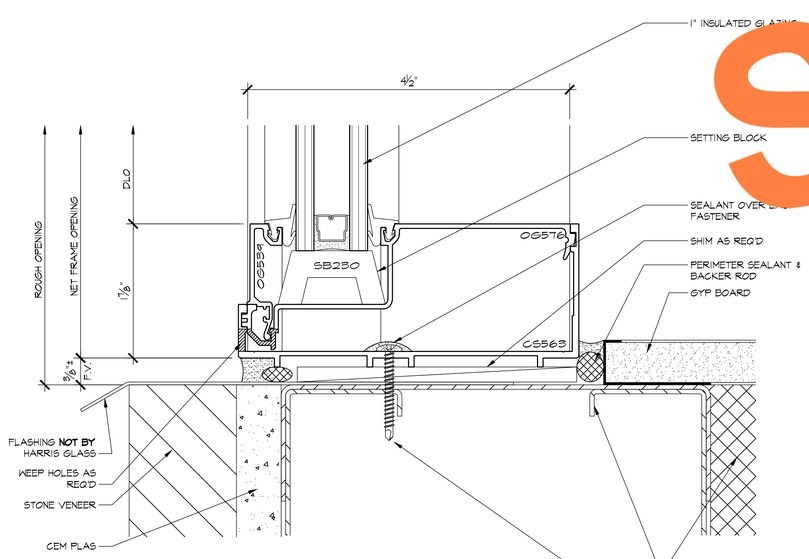

2 / 5.01 SILL
ARCH'L: 2/A7.6

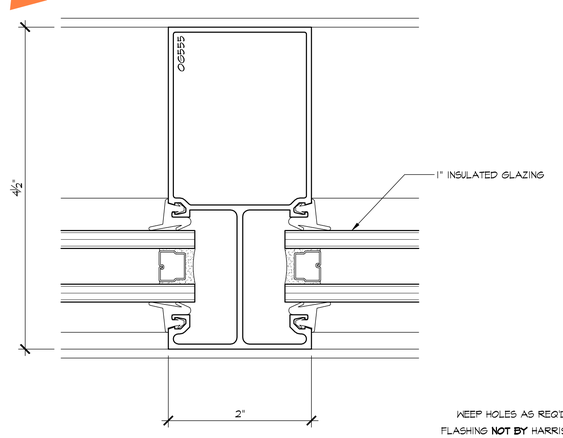

4 / 5.01 VERTICAL
ARCH'L:

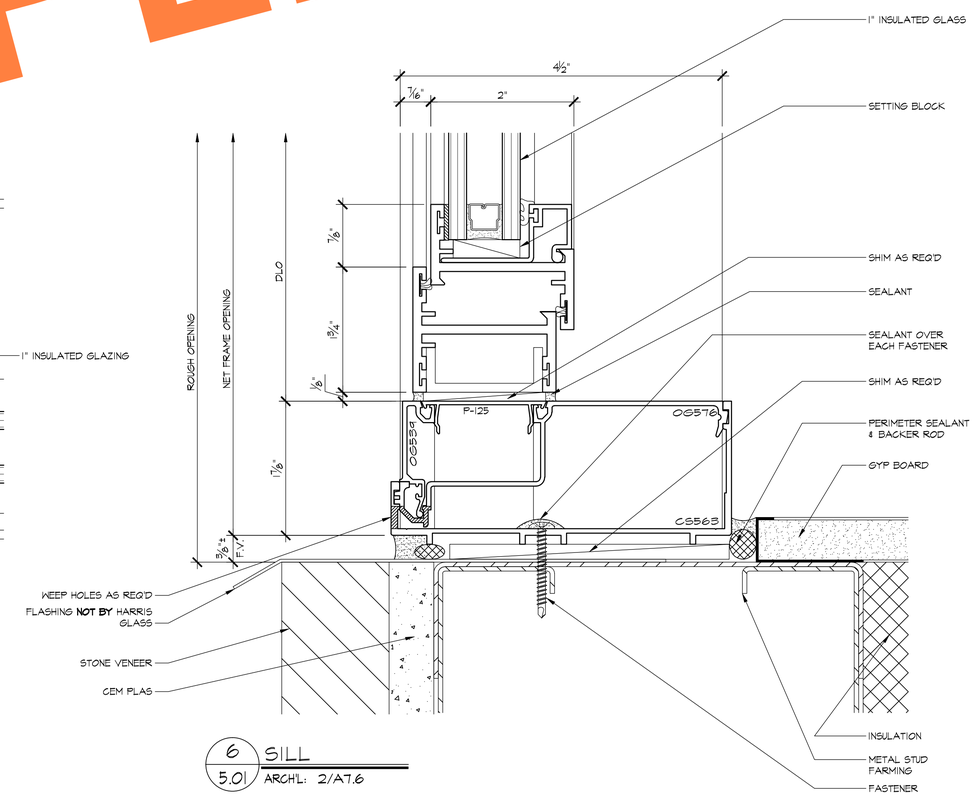

6 / 5.01 SILL
ARCH'L: 2/A7.6

SAMPLE

REVISIONS	BY
△	
△	
△	
△	
△	

BMR
DRAFTING SERVICE
SINCE 1988
23846 SUNNYMEAD BLVD.
SUITE #6
MORENO VALLEY, CA 92553
B: (951) 243-7614
F: (951) 243-7673

HARRIS GLASS CO.
6918 SOUTH ATLANTIC AVENUE
BELL, CA 90201

JOB NAME: SILVER LAKE BRANCH LIBRARY
ARCHITECT: M2A
SHEET DESCRIPTION: DETAILS
DATE: 9/10/07
SCALE: FULL
DRAWN: CTB
JOB NO: 066-07
SHEET NO: 5.01

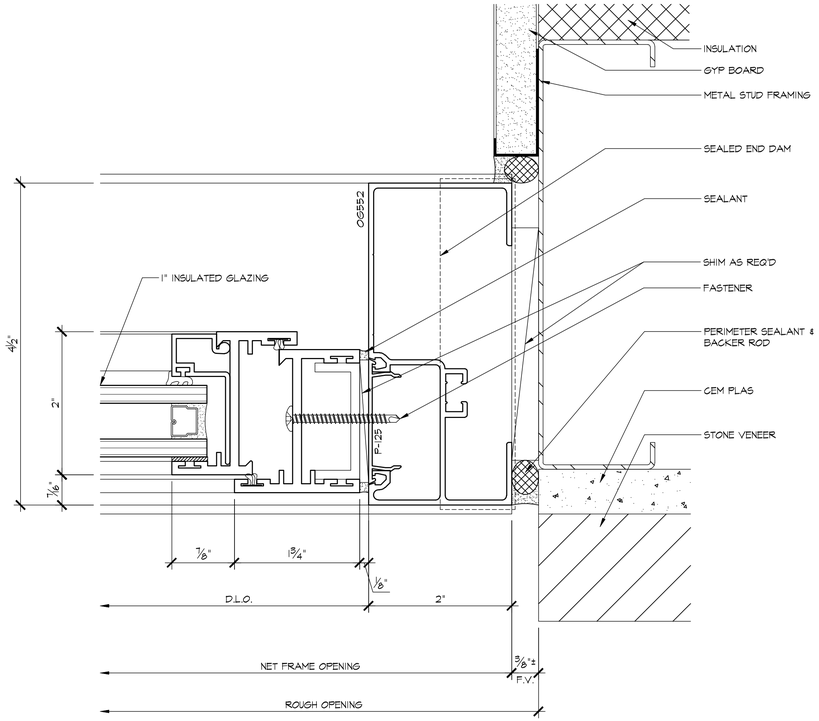

1 / 5.02 JAMB
ARCH'L: 6/A7.6

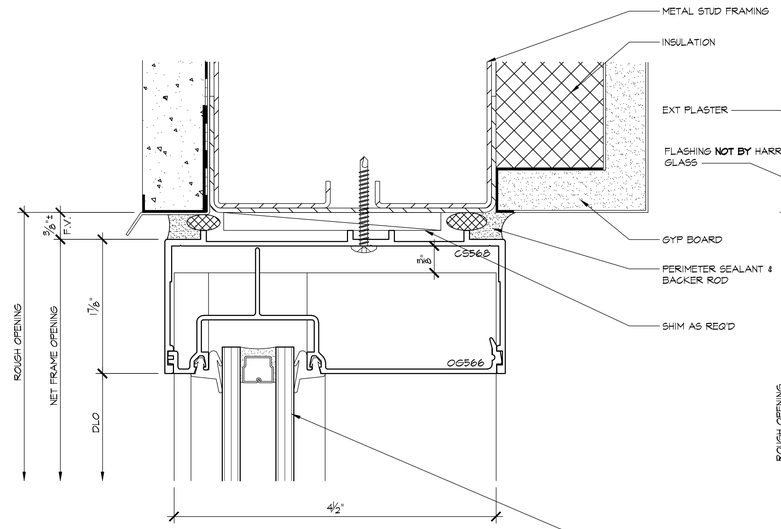

3 / 5.02 HEAD
ARCH'L: 17/A7.6

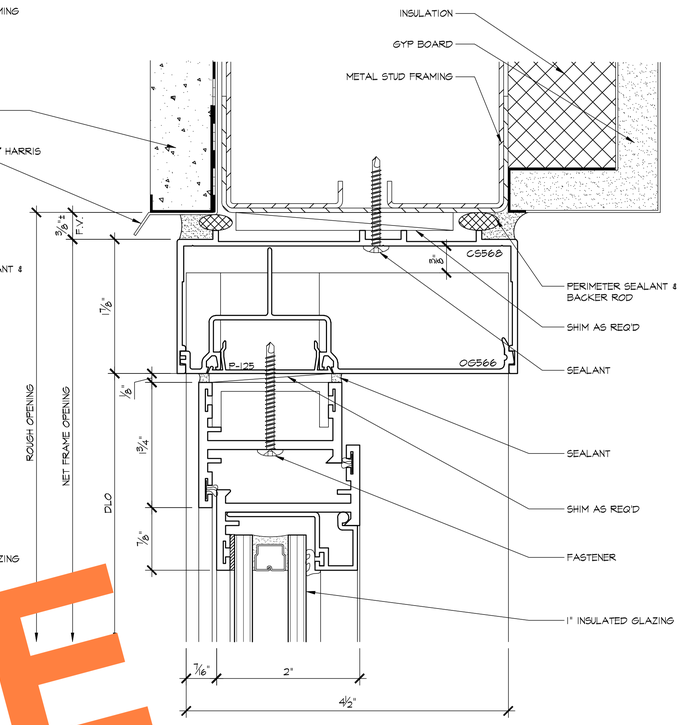

5 / 5.02 HEAD
ARCH'L: 17/A7.6

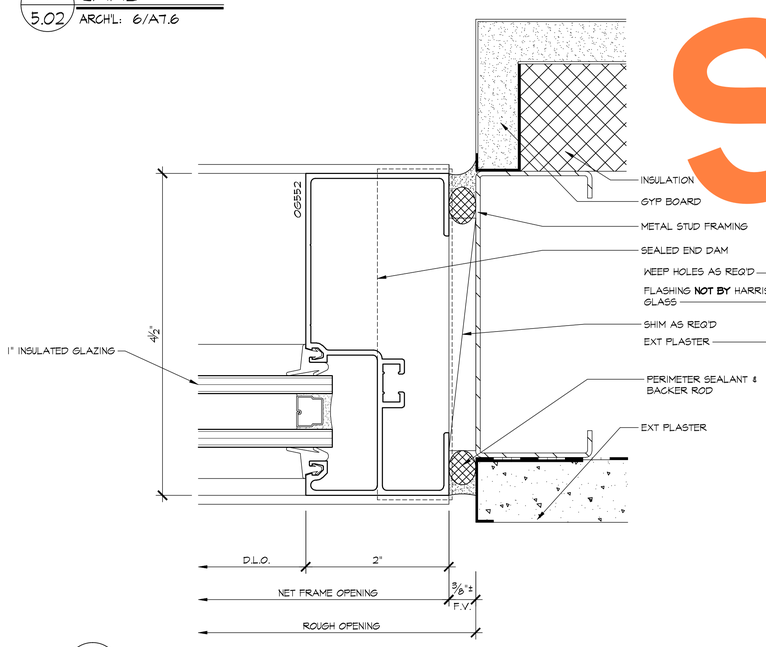

2 / 5.02 JAMB
ARCH'L: 16/A7.6

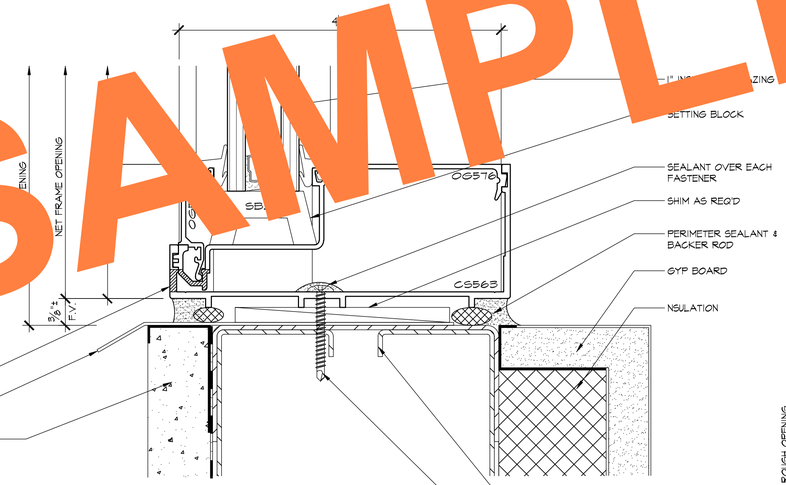

4 / 5.02 SILL
ARCH'L: 12/A7.6

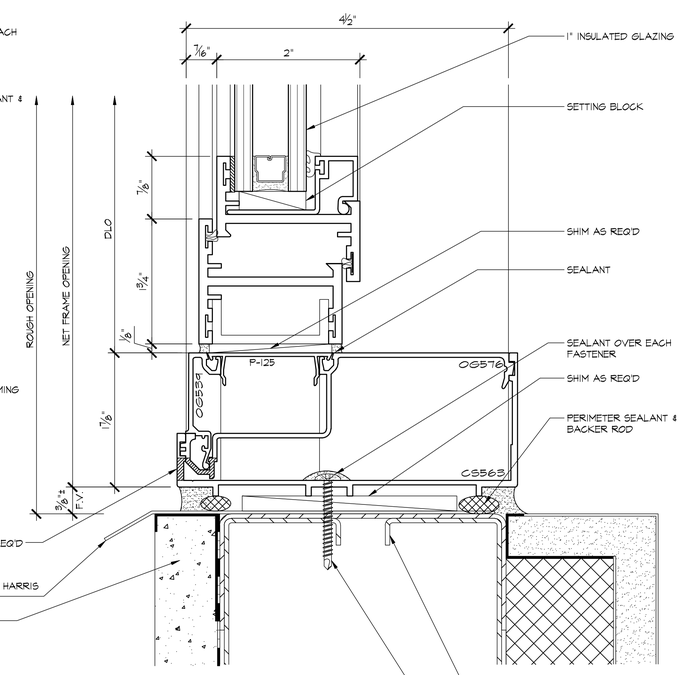

6 / 5.02 SILL
ARCH'L: 12/A7.6

SAMPLE

REVISIONS	BY
△	
△	
△	
△	
△	

BMR
DRAFTING SERVICE
SINCE 1988
23846 SUNNYMEAD BLVD.
SUITE #6
MORENO VALLEY, CA 92553
B: (951) 243-7614
F: (951) 243-7673

HARRIS GLASS CO.
6918 SOUTH ATLANTIC AVENUE
BELL, CA 90201

JOB NAME: SILVER LAKE BRANCH LIBRARY
ARCHITECT: M2A
SHEET DESCRIPTION: DETAILS

DATE: 9/10/07
SCALE: FULL
DRAWN: CTB
JOB NO: 066-07
SHEET NO: 5.02

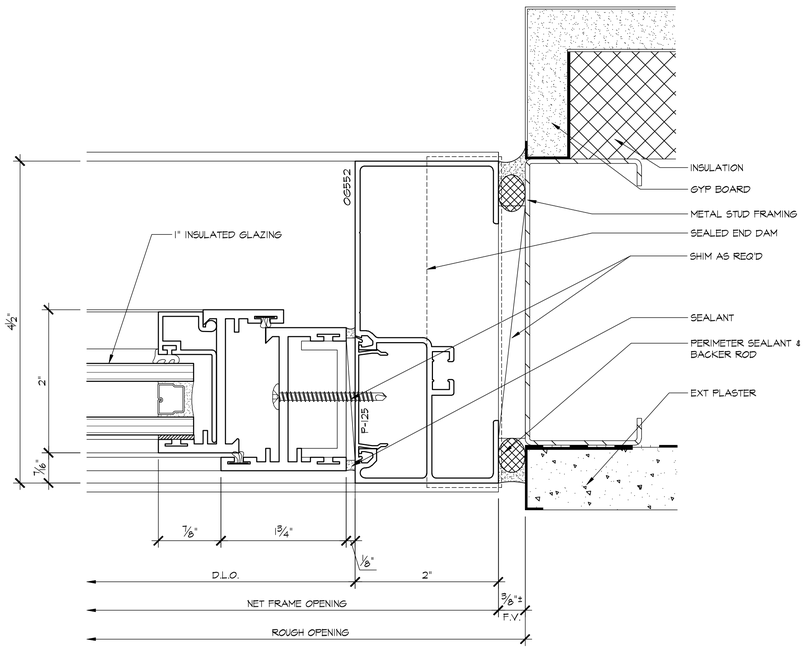

1 / 5.03 JAMB
ARCH'L: 11/A7.6

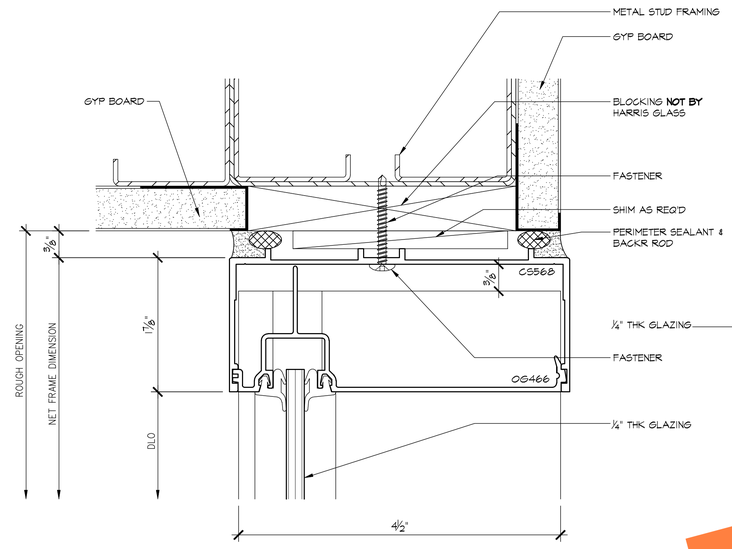

3 / 5.03 HEAD
ARCH'L: 8/A8.5

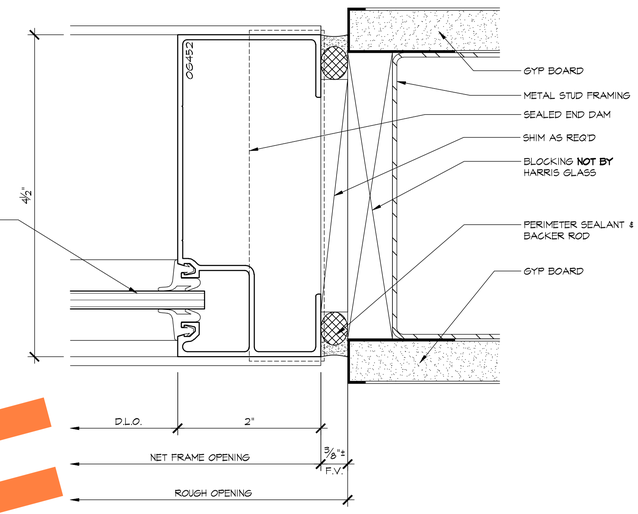

5 / 5.03 JAMB
ARCH'L: 6/A8.5

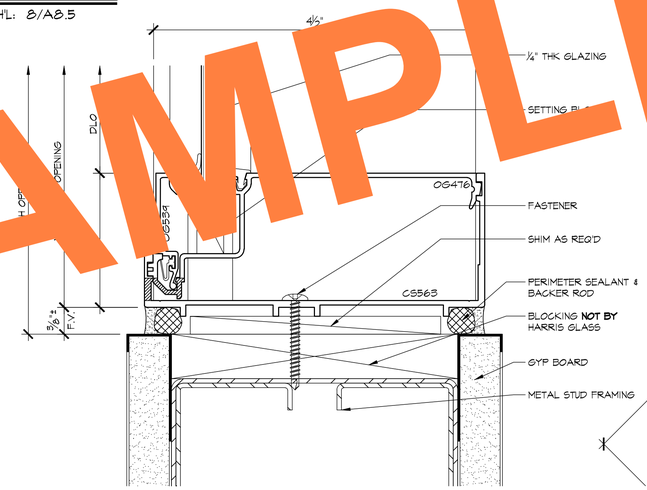

4 / 5.03 SILL
ARCH'L: 9/A8.5

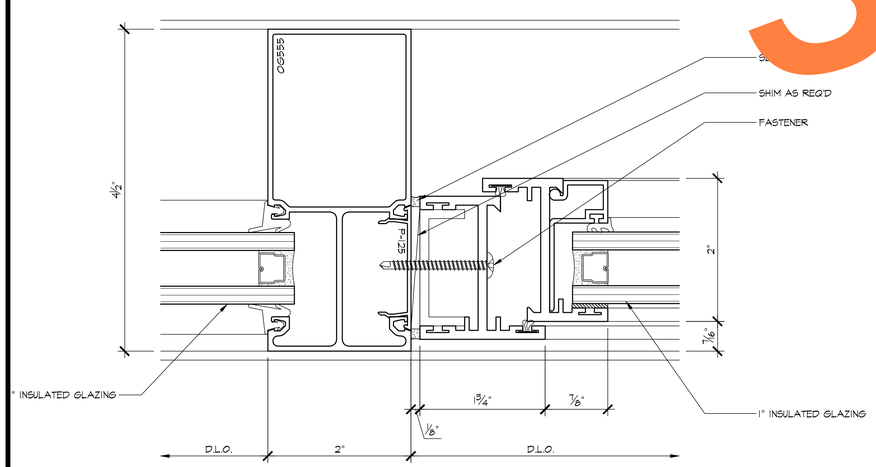

2 / 5.03 VERTICAL
ARCH'L:

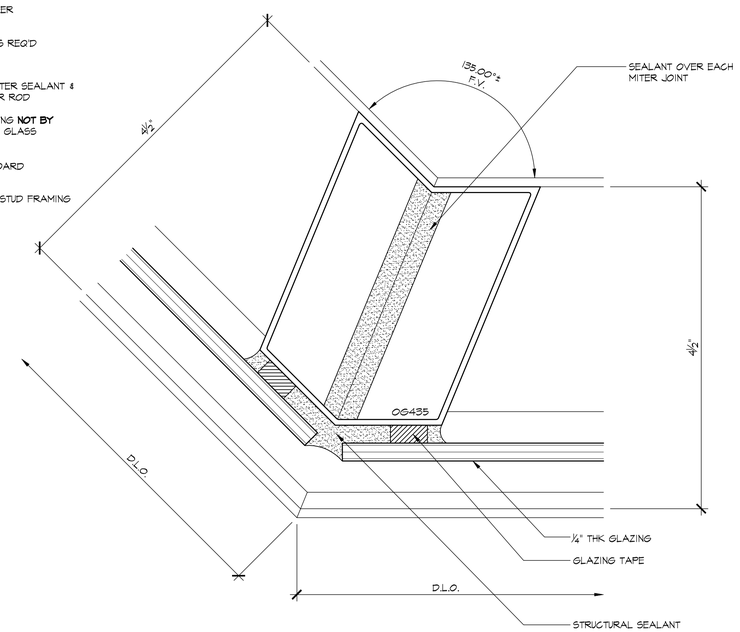

6 / 5.03 CORNER
ARCH'L: 7/A8.5

SAMPLE

REVISIONS	BY
△	
△	
△	
△	
△	

BMR
DRAFTING SERVICE
SINCE 1988
23846 SUNNYMEAD BLVD.
SUITE #6
MORENO VALLEY, CA 92553
B: (951) 243-7614
F: (951) 243-7673

HARRIS GLASS CO.
6918 SOUTH ATLANTIC AVENUE
BELL, CA 90201

JOB NAME: SILVER LAKE BRANCH LIBRARY
ARCHITECT: M2A
SHEET DESCRIPTION: DETAILS

DATE: 9/10/07
SCALE: FULL
DRAWN: CTB
JOB NO: 066-07
SHEET NO: 5.03

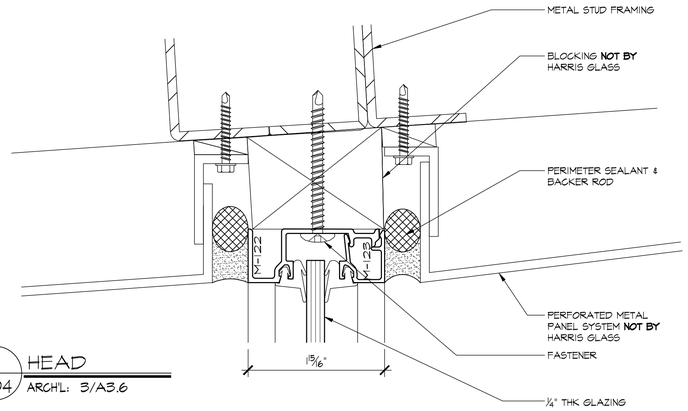

1 / 5.04 HEAD
ARCH'L: 3/A3.6

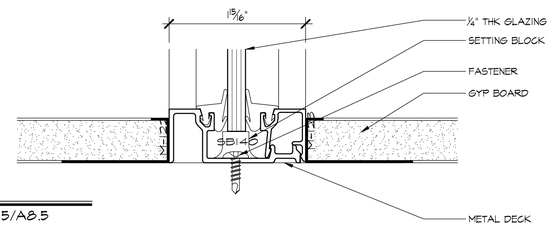

2 / 5.04 SILL
ARCH'L: 5/A8.5

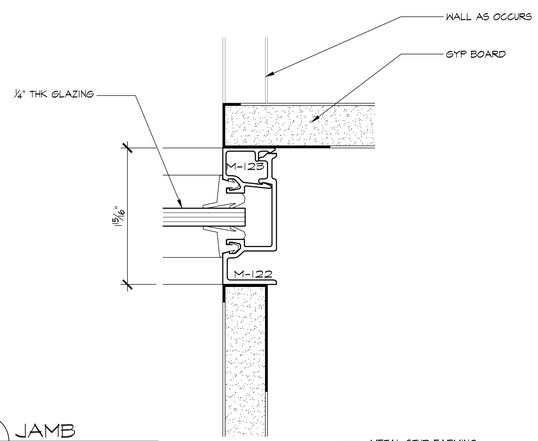

3 / 5.04 JAMB
ARCH'L: 1/A7.6

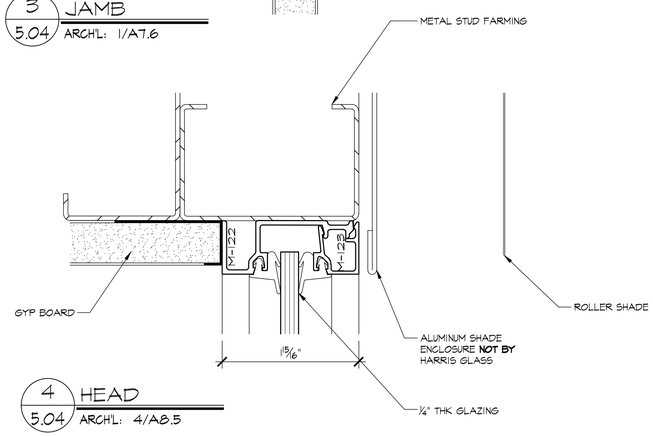

4 / 5.04 HEAD
ARCH'L: 4/A8.5

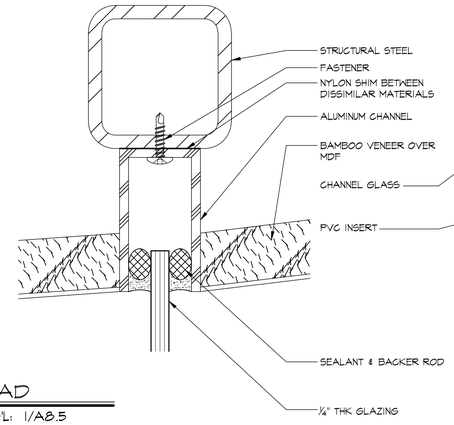

5 / 5.04 HEAD
ARCH'L: 1/A8.5

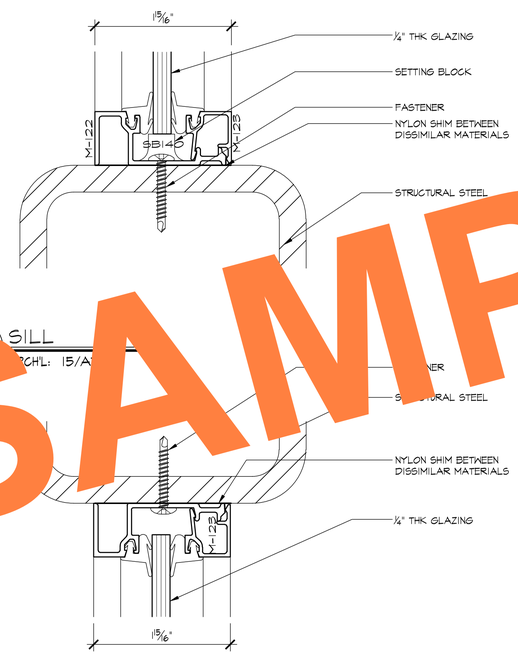

6 / 5.04 SILL
ARCH'L: 15/A

7 / 5.04 HEAD
ARCH'L: 15/A7.6

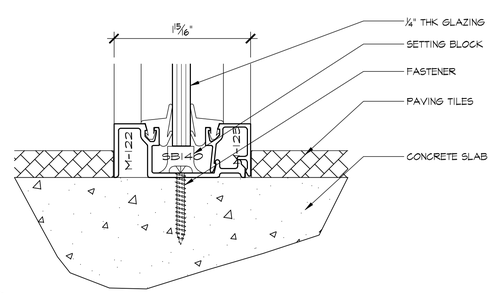

8 / 5.04 SILL
ARCH'L:

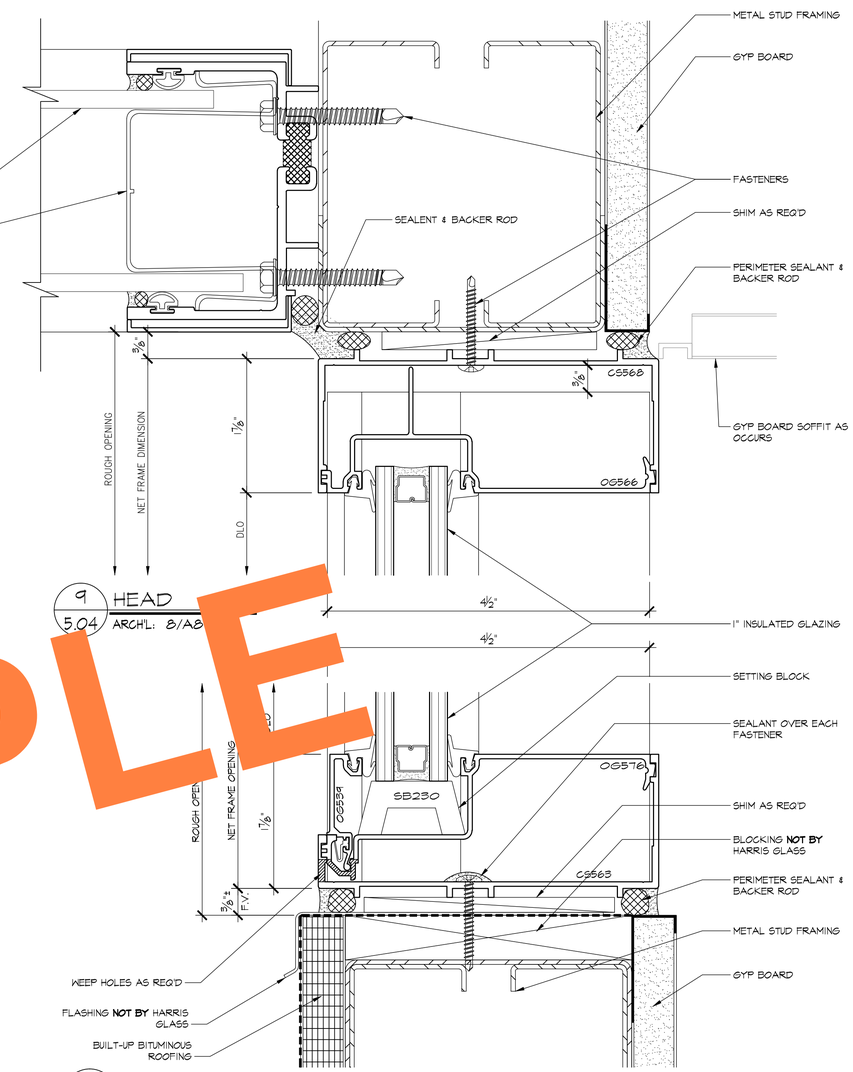

9 / 5.04 HEAD
ARCH'L: 8/A8

10 / 5.04 SILL
ARCH'L: 13/A8.4 (SIM)

SAMPLE

REVISIONS	BY
△	
△	
△	
△	
△	

BMR
DRAFTING SERVICE
SINCE 1988
23846 SUNNYMEAD BLVD.
SUITE #6
MORENO VALLEY, CA 92553
B: (951) 243-7614
F: (951) 243-7673

HARRIS GLASS CO.
6918 SOUTH ATLANTIC AVENUE
BELL, CA 90201

JOB NAME: SILVER LAKE BRANCH LIBRARY
ARCHITECT: M2A
SHEET DESCRIPTION: DETAILS
DATE: 9/10/07
SCALE: FULL
DRAWN: CTB
JOB NO: 066-07
SHEET NO: 5.04

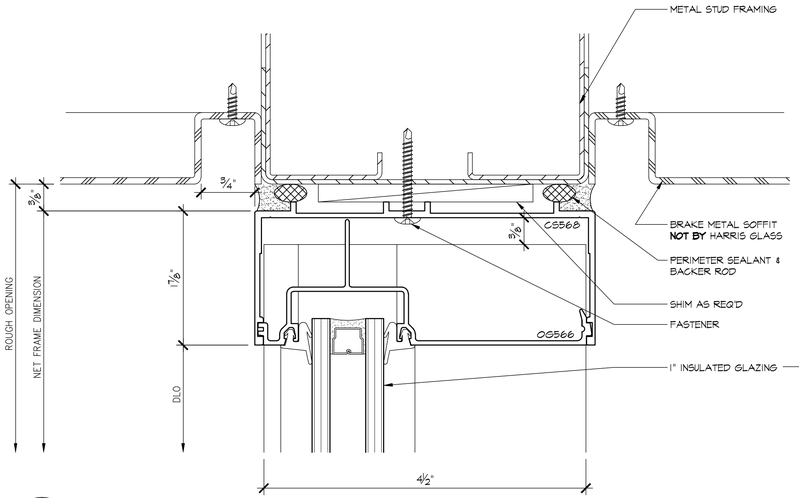

1 / 5.05 HEAD
ARCH'L: 20/A7.4

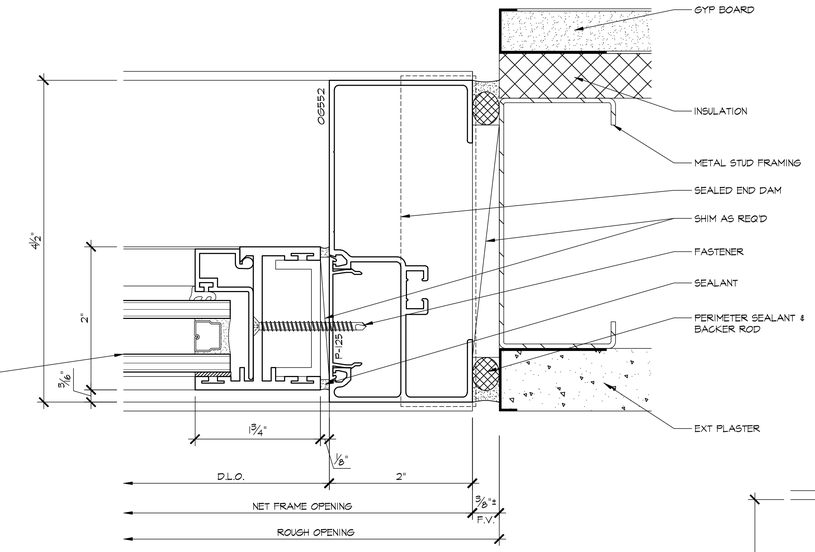

4 / 5.05 JAMB
ARCH'L: 14/A7.4

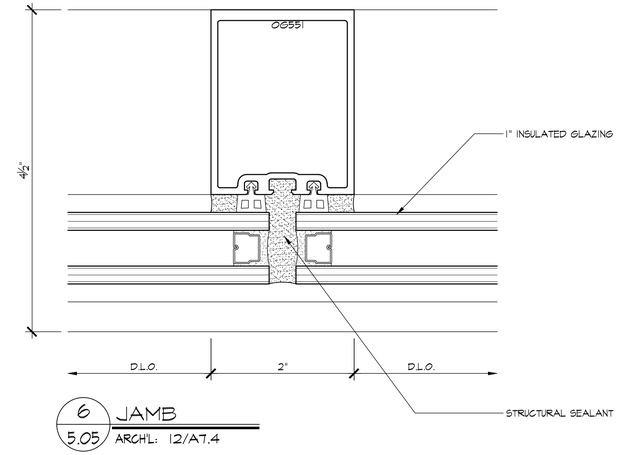

6 / 5.05 JAMB
ARCH'L: 12/A7.4

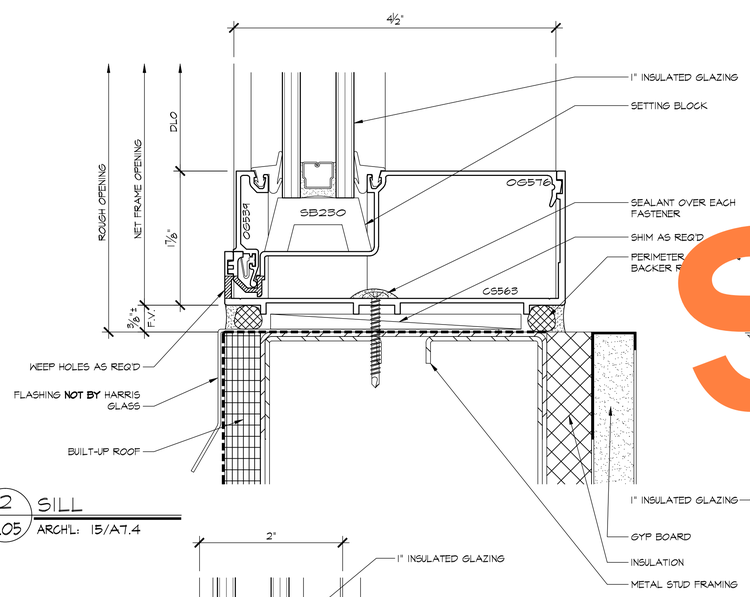

2 / 5.05 SILL
ARCH'L: 15/A7.4

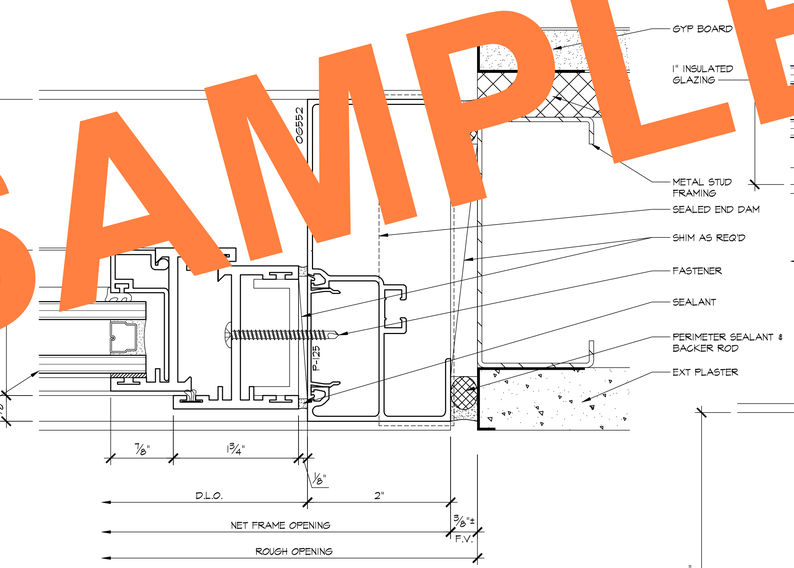

5 / 5.05 JAMB
ARCH'L: 14/A7.4

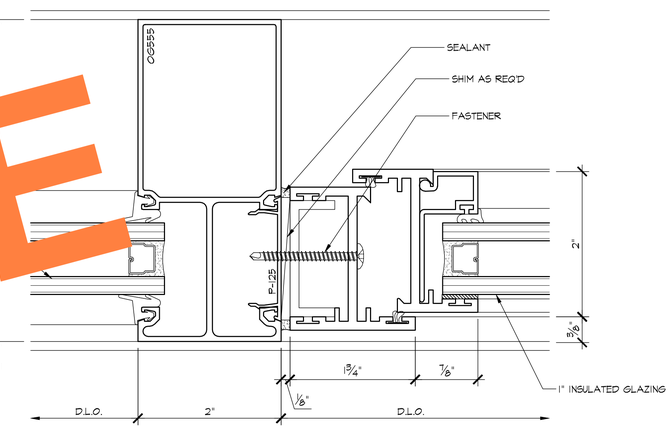

7 / 5.05 VERTICAL
ARCH'L: 13/A7.4

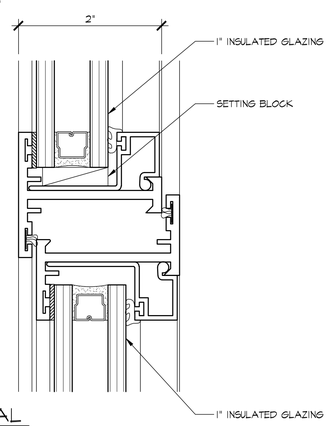

3 / 5.05 HORIZONTAL
ARCH'L:

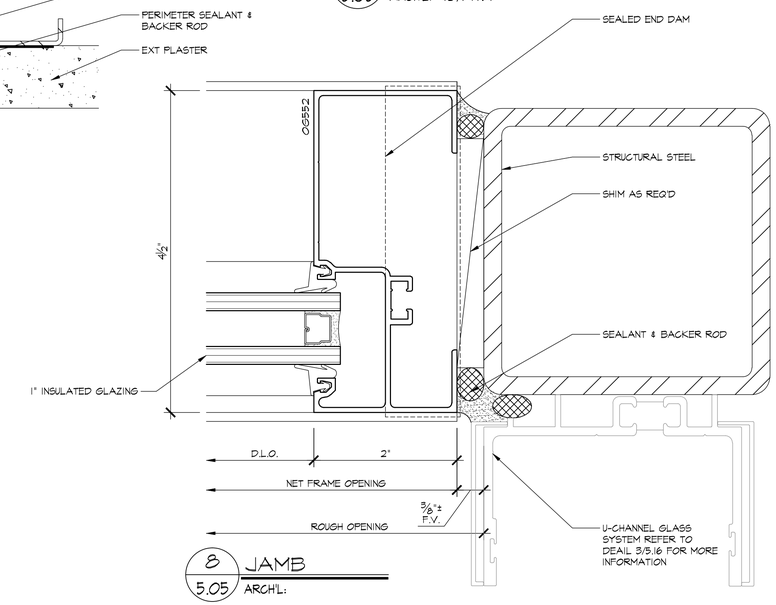

8 / 5.05 JAMB
ARCH'L:

SAMPLE

REVISIONS	BY
△	
△	
△	
△	
△	

BMR
DRAFTING SERVICE
SINCE 1988
23846 SUNNYMEAD BLVD.
SUITE #6
MORENO VALLEY, CA 92553
B: (951) 243-7614
F: (951) 243-7673

HARRIS GLASS CO.
6918 SOUTH ATLANTIC AVENUE
BELL, CA 90201

JOB NAME: SILVER LAKE BRANCH LIBRARY
ARCHITECT: M2A
SHEET DESCRIPTION: DETAILS

DATE: 9/10/07
SCALE: FULL
DRAWN: CTB
JOB NO: 066-07
SHEET NO: 5.05

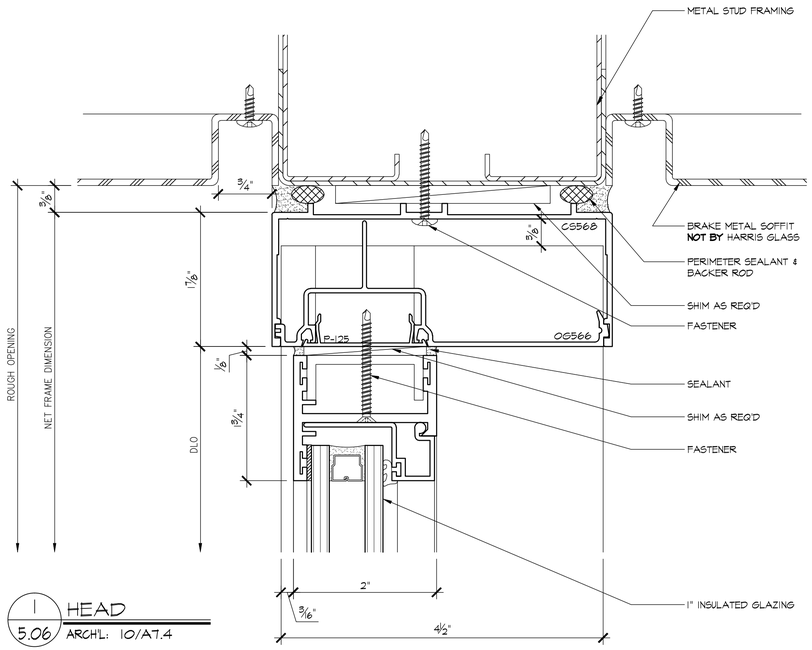

1 / 5.06 HEAD
ARCH'L: 10/A7.4

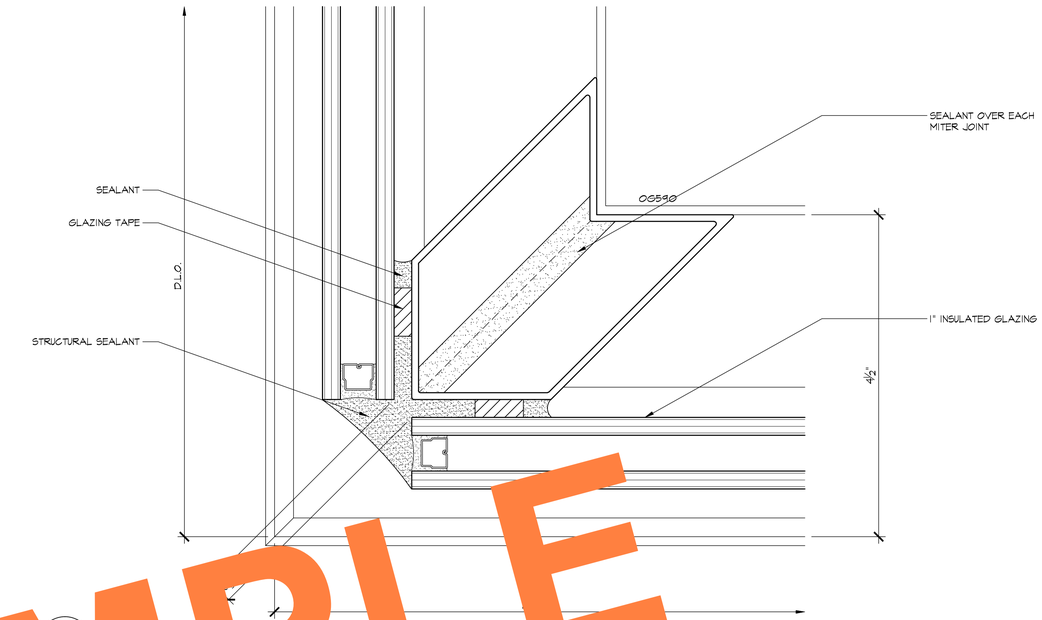

3 / 5.06 [illegible]
[illegible] A7.4

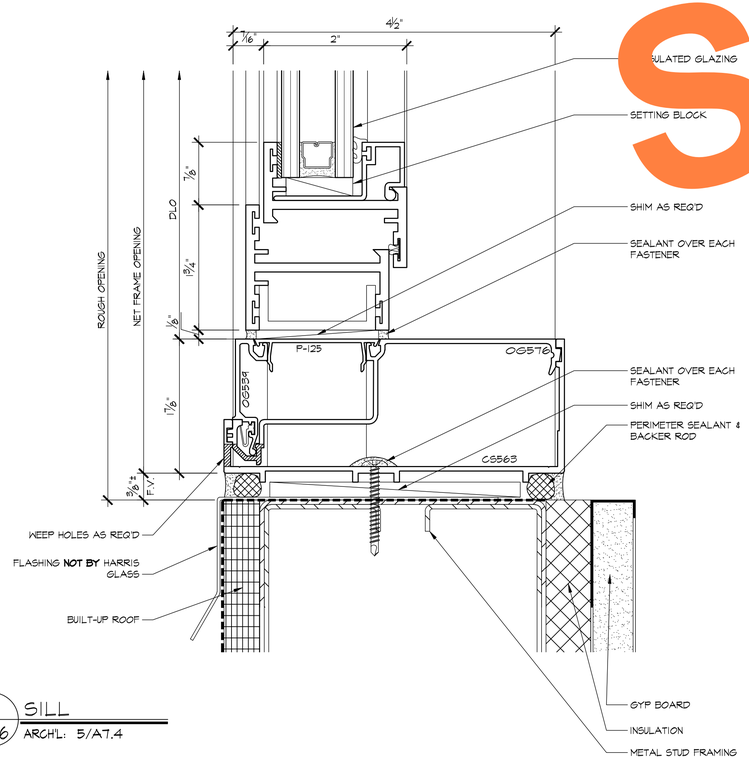

2 / 5.06 SILL
ARCH'L: 5/A7.4

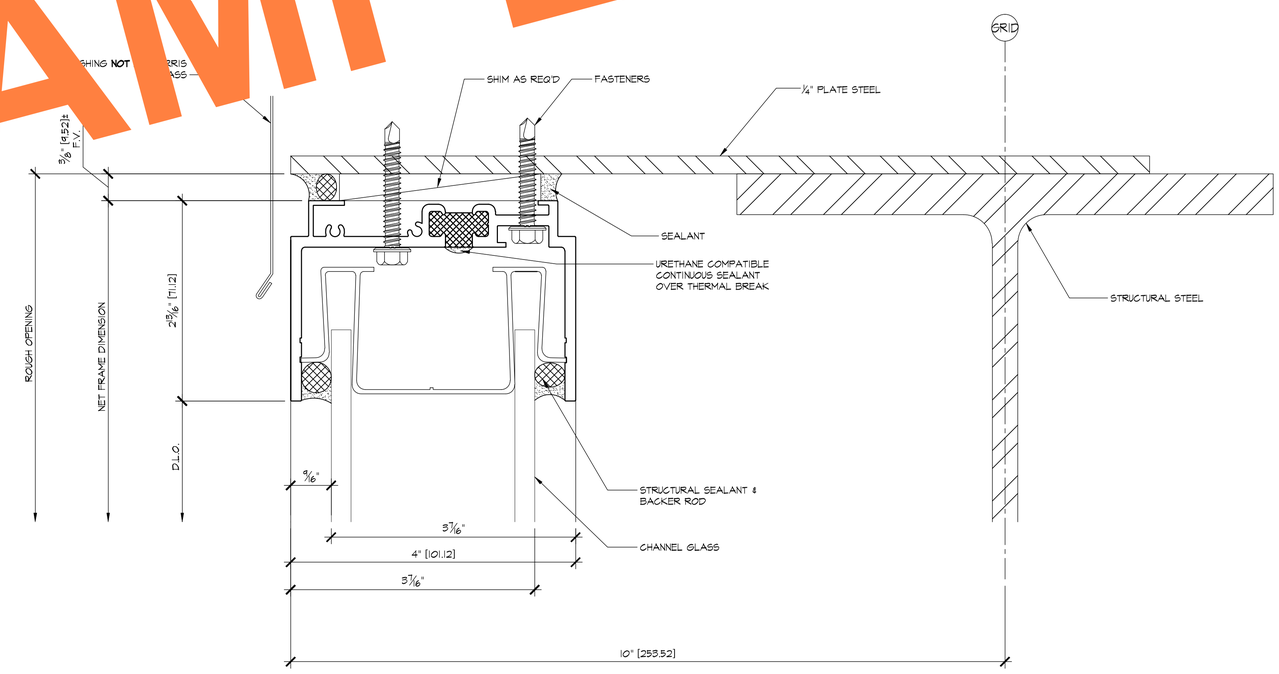

4 / 5.06 HEAD
ARCH'L: 8/A7.2

SAMPLE

REVISIONS	BY
△	
△	
△	
△	
△	

BMR
DRAFTING SERVICE
SINCE 1988
23846 SUNNYMEAD BLVD.
SUITE #6
MORENO VALLEY, CA 92553
B: (951) 243-7614
F: (951) 243-7673

HARRIS GLASS CO.
6918 SOUTH ATLANTIC AVENUE
BELL, CA 90201

JOB NAME: SILVER LAKE BRANCH LIBRARY
ARCHITECT: M2A
SHEET DESCRIPTION: DETAILS

DATE: 9/10/07
SCALE: FULL
DRAWN: CTB
JOB NO: 066-07
SHEET NO: 5.06

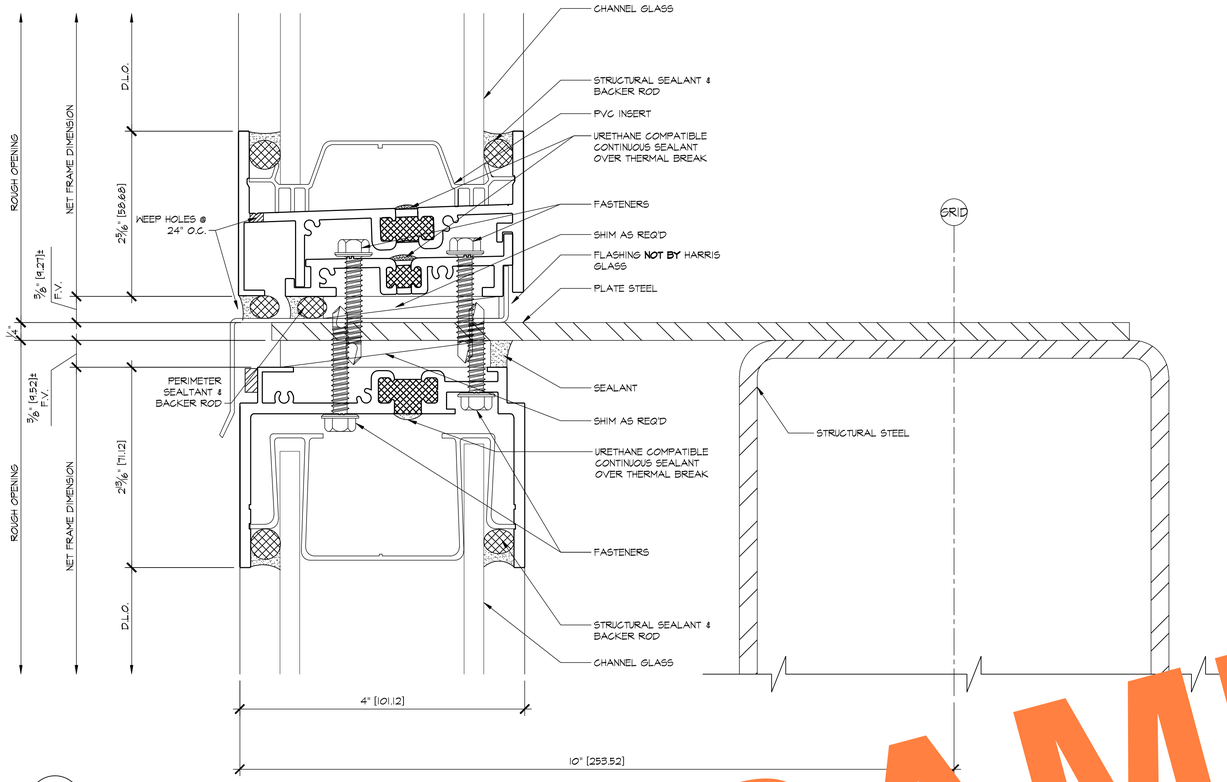

1 / 5.07 SILL/HEAD
ARCH'L: 12/A7.3

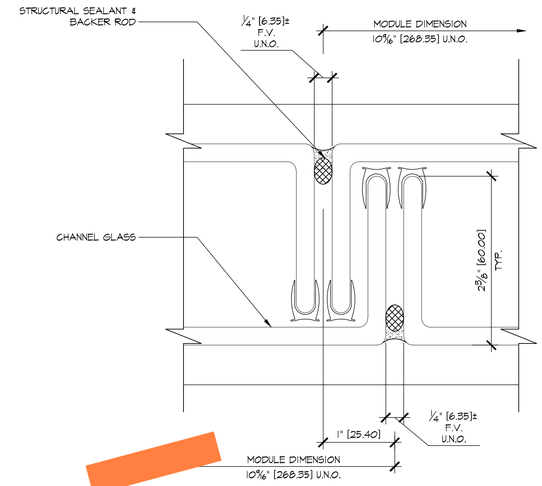

5 TYP. CHANNEL GLASS CONNECTION

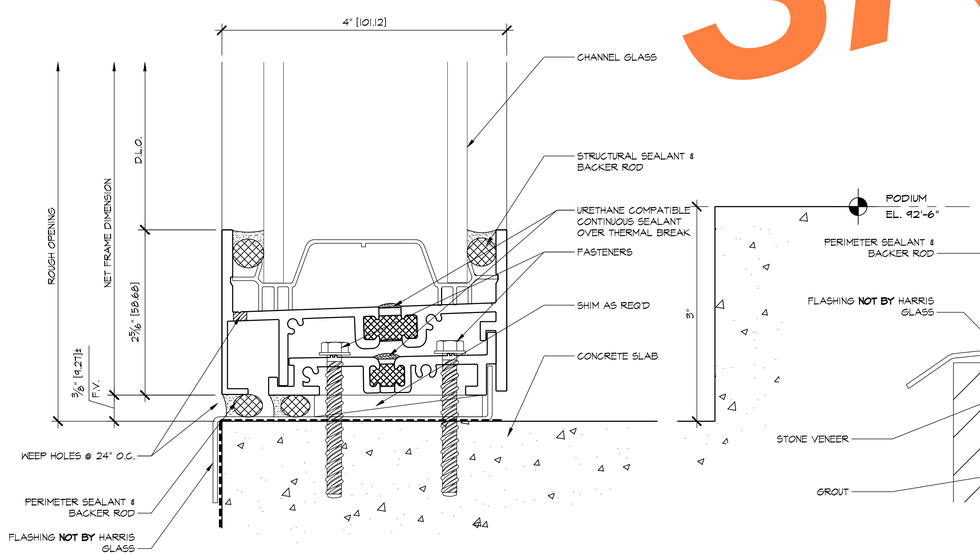

2 / 5.07 SILL
ARCH'L: 7/A7.3

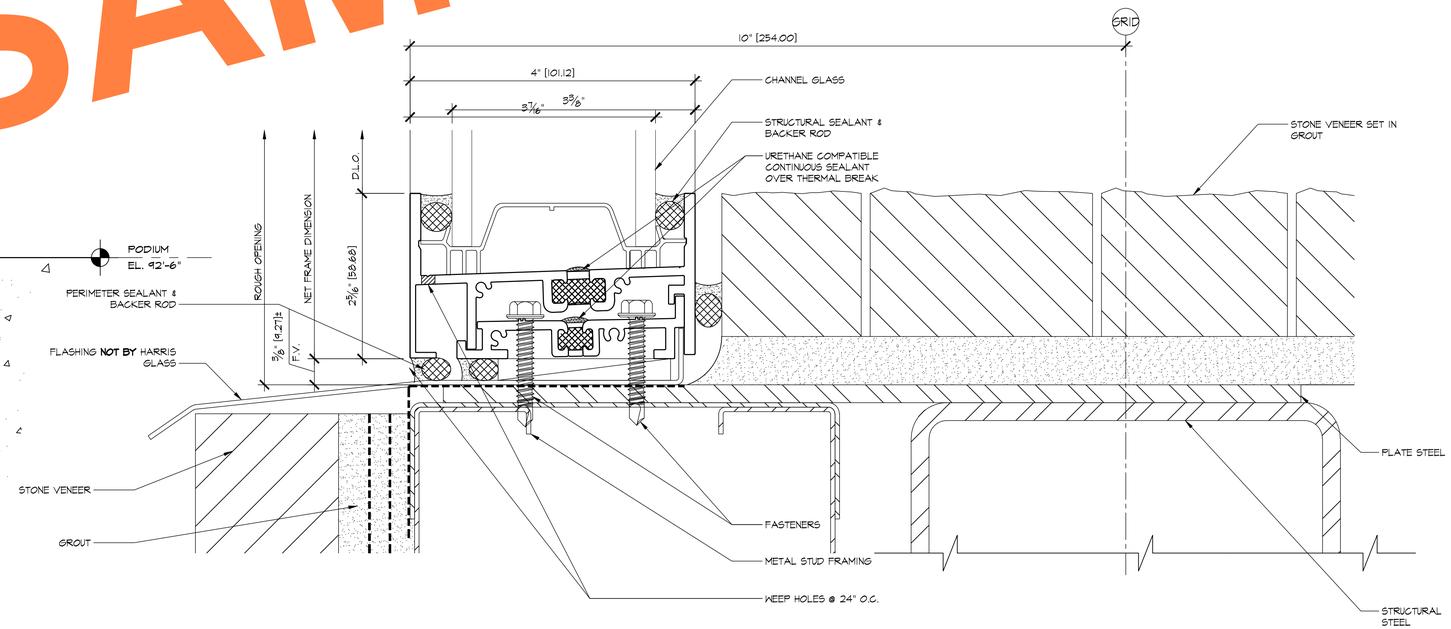

4 / 5.07 SILL
ARCH'L: 13/A7.3

SAMPLE

REVISIONS	BY
△	
△	
△	
△	
△	

BMR
DRAFTING SERVICE
SINCE 1988
23846 SUNNYMEAD BLVD.
SUITE #6
MORENO VALLEY, CA 92553
B: (951) 243-7614
F: (951) 243-7673

HARRIS GLASS CO.
6918 SOUTH ATLANTIC AVENUE
BELL, CA 90201

JOB NAME: SILVER LAKE BRANCH LIBRARY
ARCHITECT: M2A
SHEET DESCRIPTION: DETAILS

DATE: 9/10/07
SCALE: FULL
DRAWN: CTB
JOB NO: 066-07
SHEET NO: 5.07

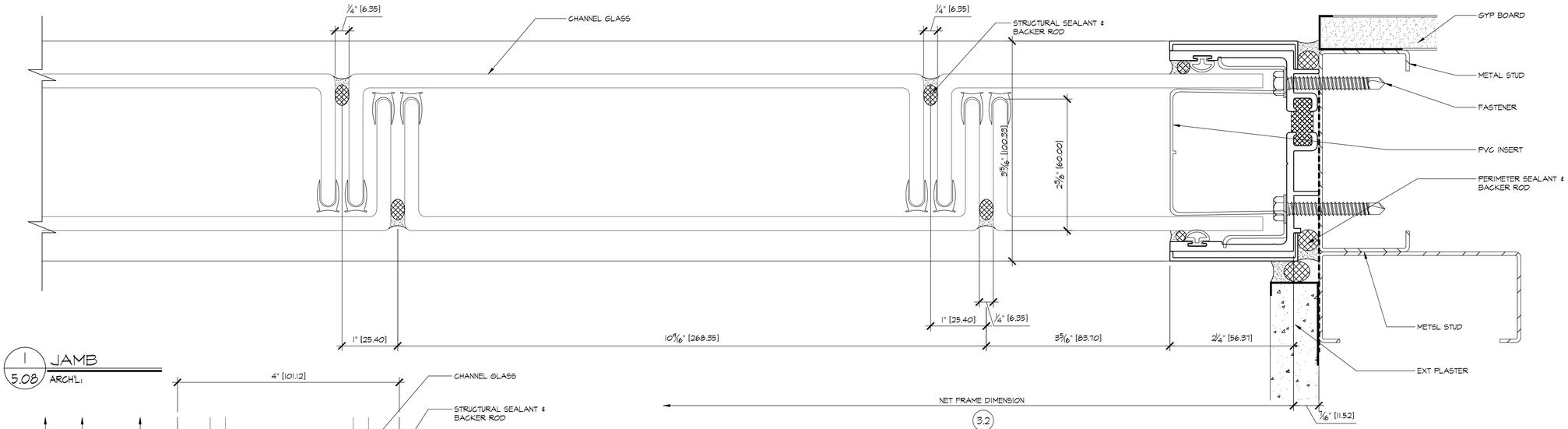

1 / 5.08 JAMB
ARCH'L:

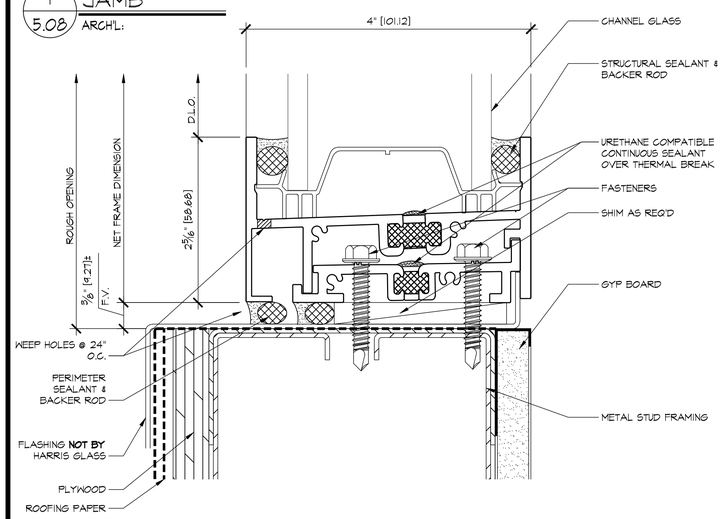

2 / 5.08 SILL
ARCH'L: 18/A7.2

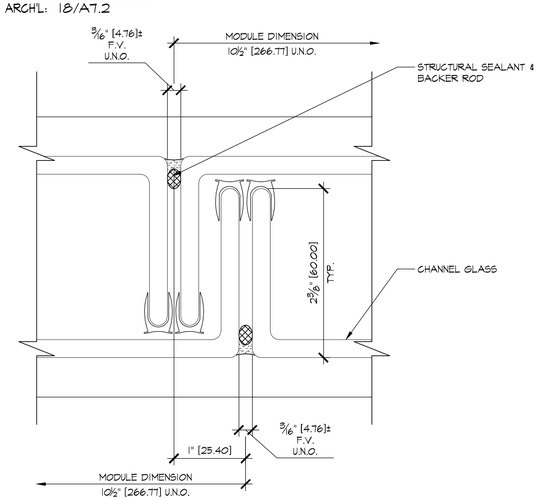

3 / 5.08 TYP. CHANNEL GLASS CONNECTION
ARCH'L:

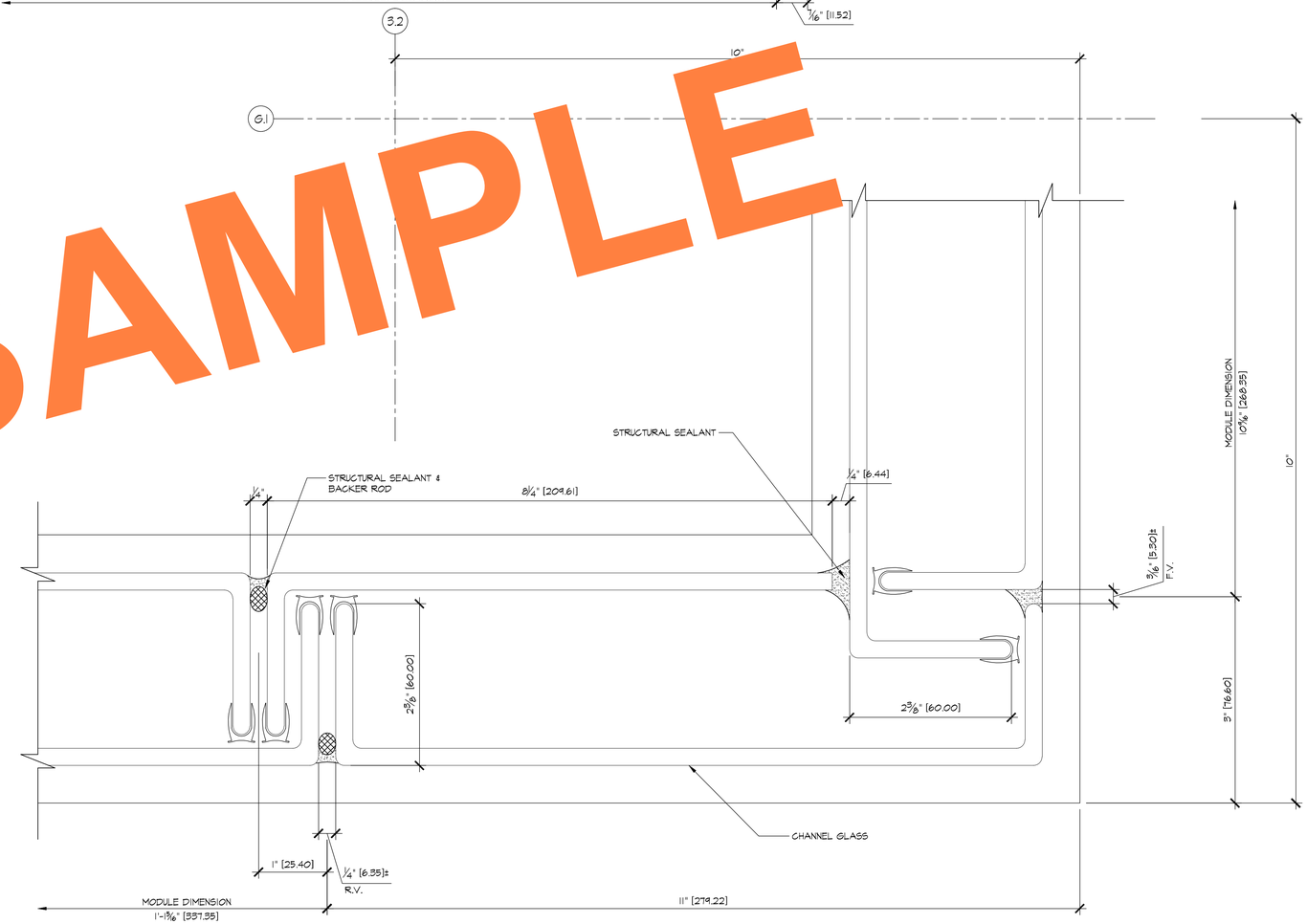

4 / 5.08 CHANNEL GLASS CORNER
ARCH'L: 9/A7.3 (SIM)

SAMPLE

REVISIONS	BY
△	
△	
△	
△	
△	

BMR
DRAFTING SERVICE
SINCE 1988
23846 SUNNYMEAD BLVD.
SUITE #6
MORENO VALLEY, CA 92553
B: (951) 243-7614
F: (951) 243-7673

HARRIS GLASS CO.
6918 SOUTH ATLANTIC AVENUE
BELL, CA 90201

JOB NAME: SILVER LAKE BRANCH LIBRARY
ARCHITECT: M2A
SHEET DESCRIPTION: DETAILS

DATE: 9/10/07
SCALE: FULL
DRAWN: CTB
JOB NO: 066-07
SHEET NO: 5.08

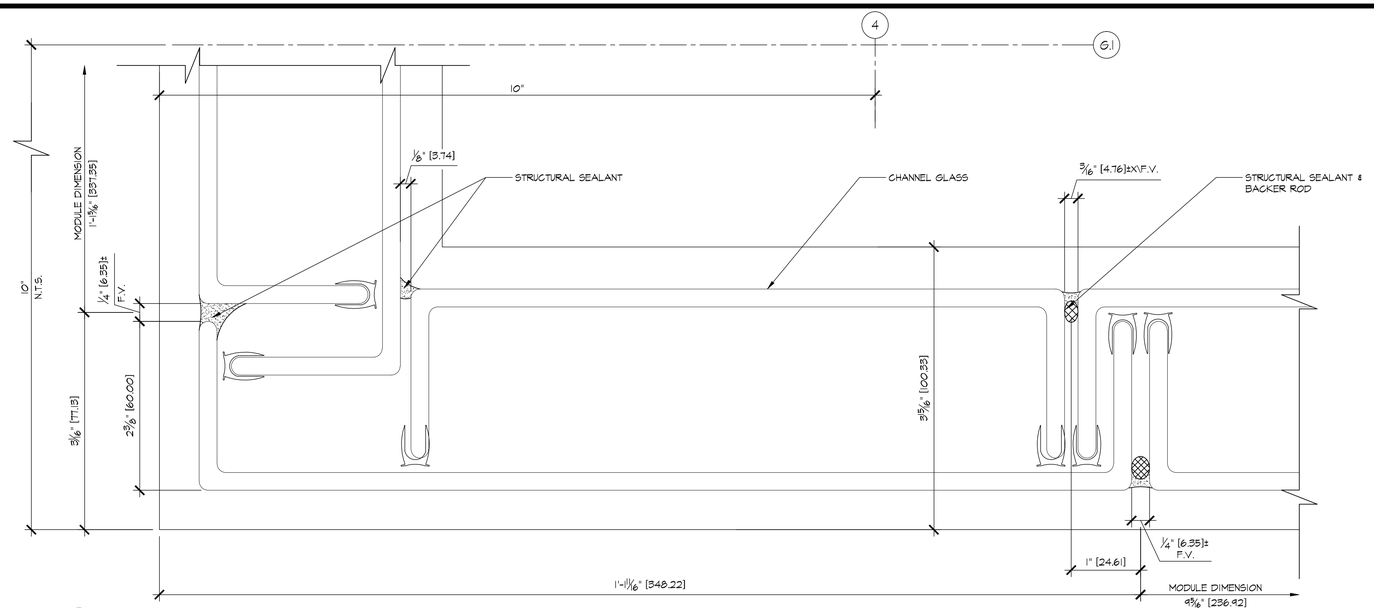

1 / 5.09 CHANNEL GLASS CORNER
ARCH'L: 9/A7.3 (SIM)

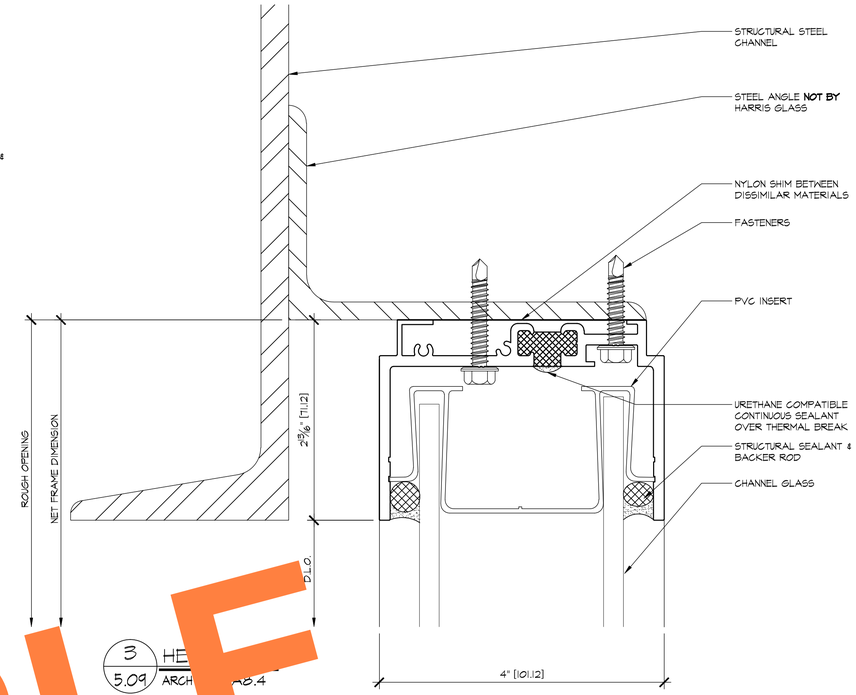

3 / 5.09 HE
ARCH [illegible] A8.4

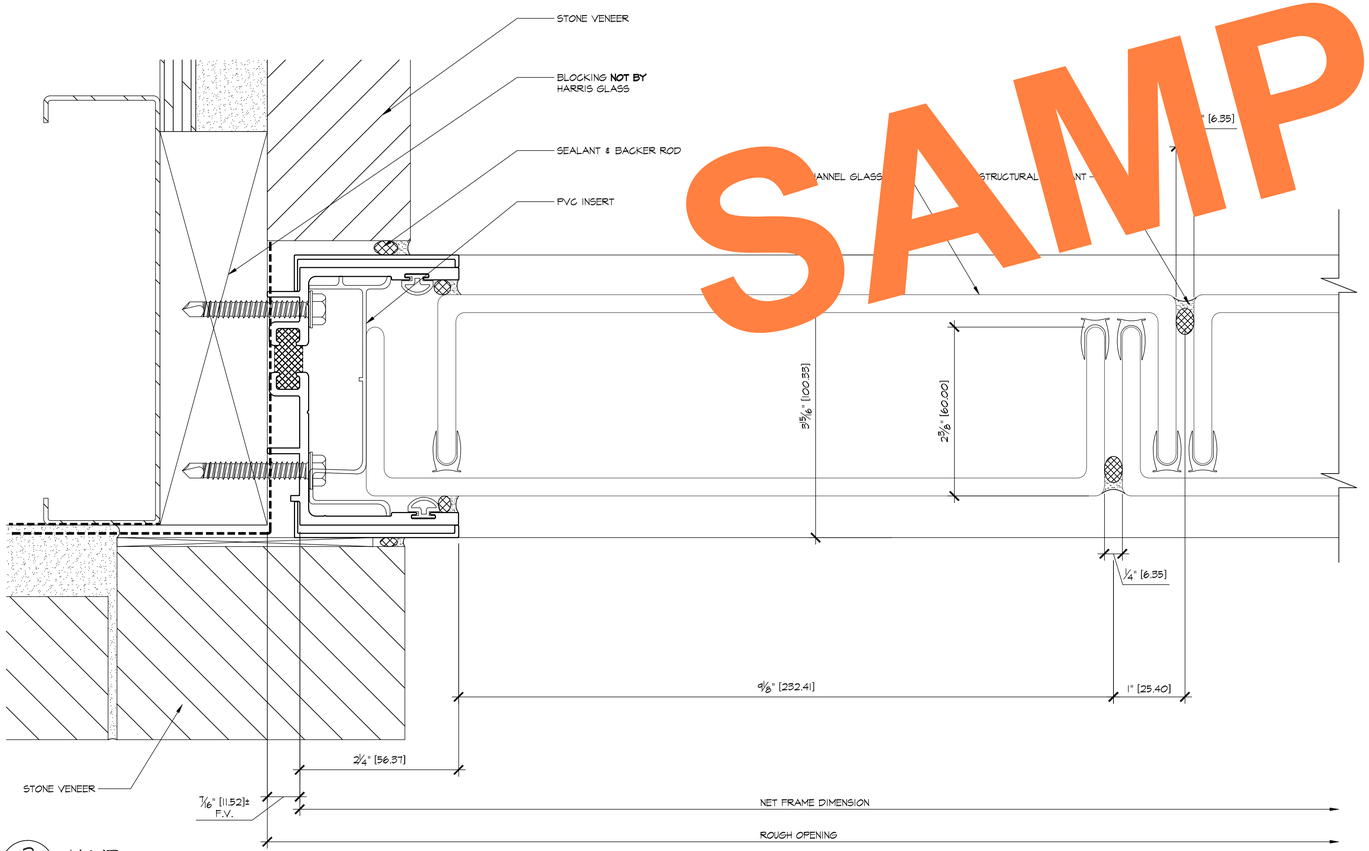

2 / 5.09 JAMB
ARCH'L: 8/A7.3

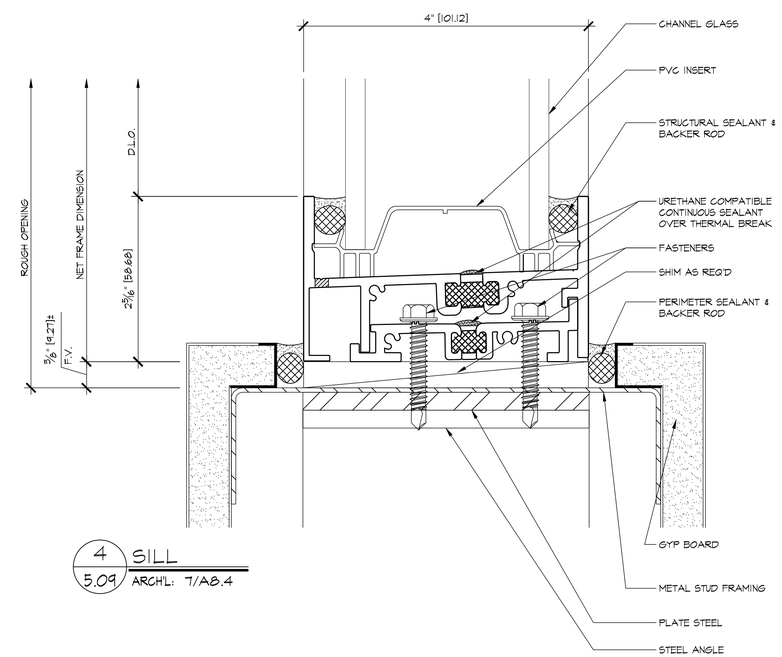

4 / 5.09 SILL
ARCH'L: 7/A8.4

SAMPLE

REVISIONS	BY
△	
△	
△	
△	
△	

BMR
DRAFTING SERVICE
SINCE 1988
23846 SUNNYMEAD BLVD.
SUITE #6
MORENO VALLEY, CA 92553
B: (951) 243-7614
F: (951) 243-7673

HARRIS GLASS CO.
6918 SOUTH ATLANTIC AVENUE
BELL, CA 90201

JOB NAME: SILVER LAKE BRANCH LIBRARY
ARCHITECT: M2A
SHEET DESCRIPTION: DETAILS
DATE: 9/10/07
SCALE: FULL
DRAWN: CTB
JOB NO: 066-07
SHEET NO: 5.09

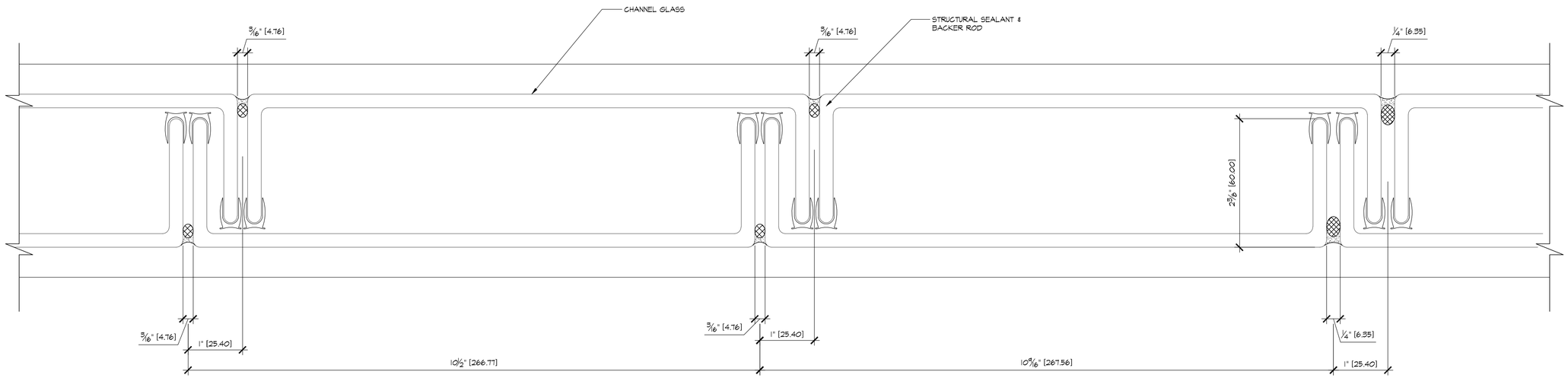

1 / 5.10 CHANNEL GLASS CONNECTION
ARCH'L:

SAMPLE

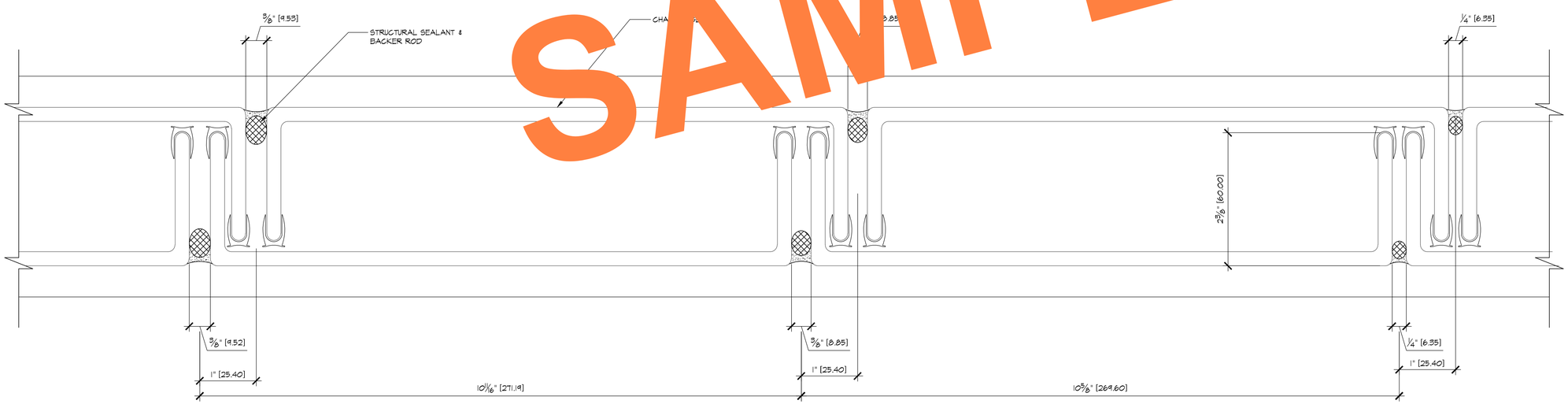

2 / 5.10 CHANNEL GLASS CONNECTION
ARCH'L:

REVISIONS	BY
△	
△	
△	
△	
△	

BMR
DRAFTING SERVICE
SINCE 1988
23846 SUNNYMEAD BLVD.
SUITE #6
MORENO VALLEY, CA 92553
B: (951) 243-7614
F: (951) 243-7673

HARRIS GLASS CO.
6918 SOUTH ATLANTIC AVENUE
BELL, CA 90201

JOB NAME: SILVER LAKE BRANCH LIBRARY
ARCHITECT: M2A
SHEET DESCRIPTION: DETAILS

DATE: 9/10/07
SCALE: FULL
DRAWN: CTB
JOB NO: 066-07
SHEET NO: 5.10

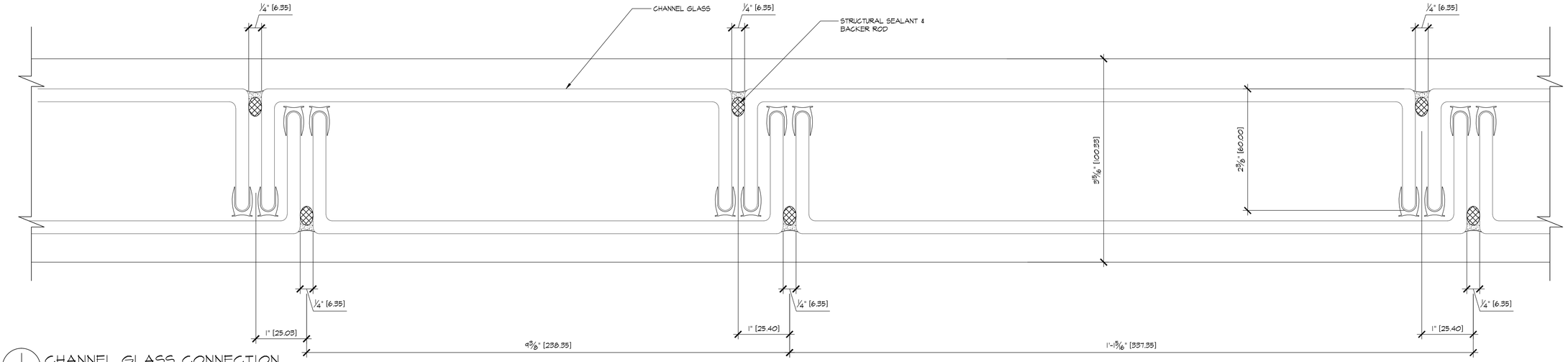

1 / 5.11 CHANNEL GLASS CONNECTION
ARCH'L:

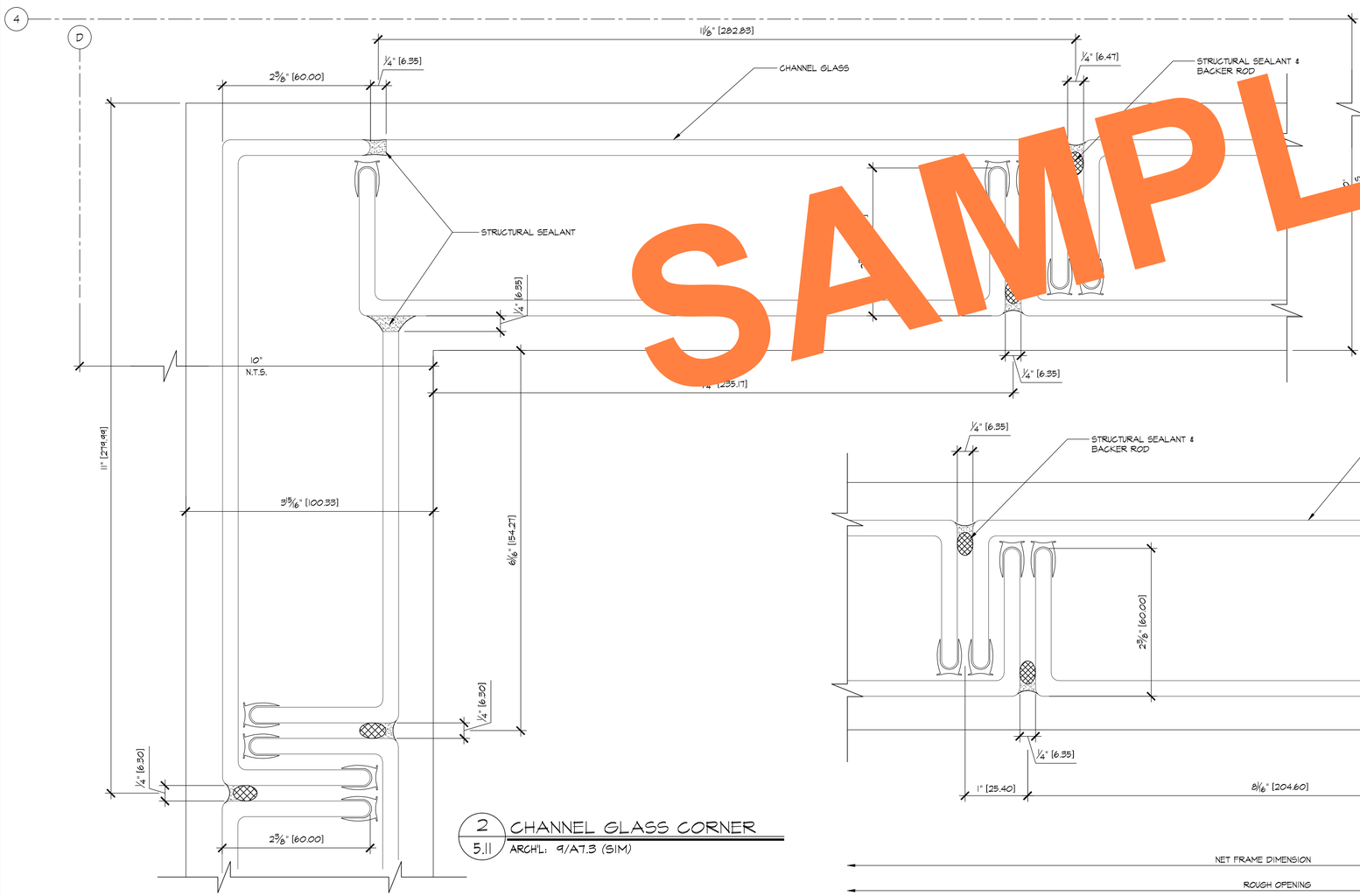

2 / 5.11 CHANNEL GLASS CORNER
ARCH'L: 9/A7.3 (SIM)

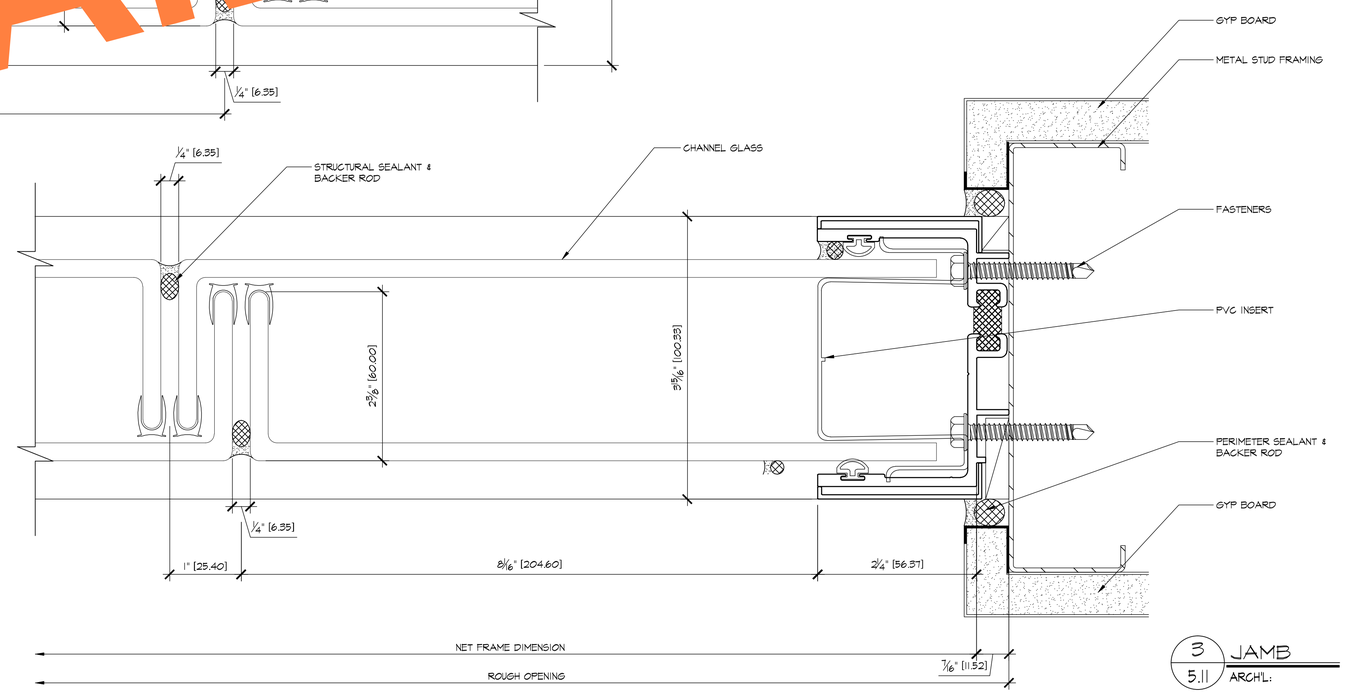

3 / 5.11 JAMB
ARCH'L:

SAMPLE

REVISIONS	BY
△	
△	
△	
△	
△	

BMR
DRAFTING SERVICE
SINCE 1988
23846 SUNNYMEAD BLVD.
SUITE #6
MORENO VALLEY, CA 92553
B: (951) 243-7614
F: (951) 243-7673

HARRIS GLASS CO.
6918 SOUTH ATLANTIC AVENUE
BELL, CA 90201

JOB NAME: SILVER LAKE BRANCH LIBRARY
ARCHITECT: M2A
SHEET DESCRIPTION: DETAILS

DATE: 9/10/07
SCALE: FULL
DRAWN: CTB
JOB NO: 066-07
SHEET NO: 5.11

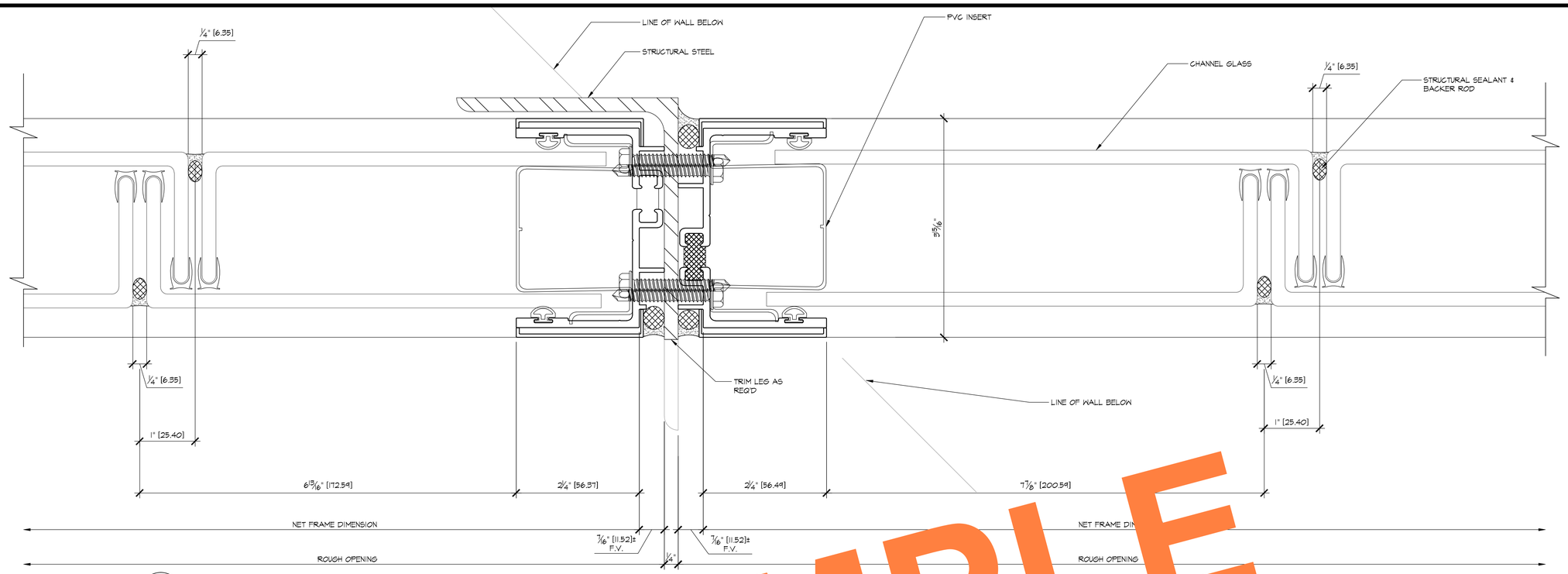

1 / 5.12 JAMB
ARCH'L: 3/A7.7

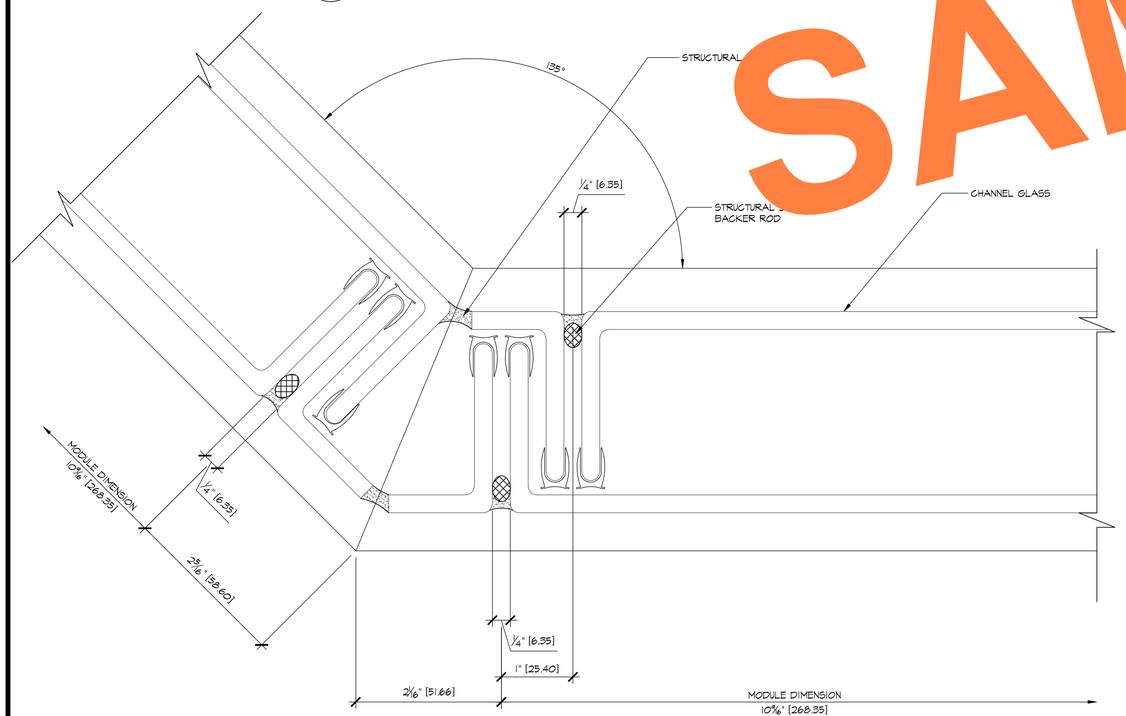

2 / 5.12 CHANNEL GLASS CORNER
ARCH'L: 4/A7.7

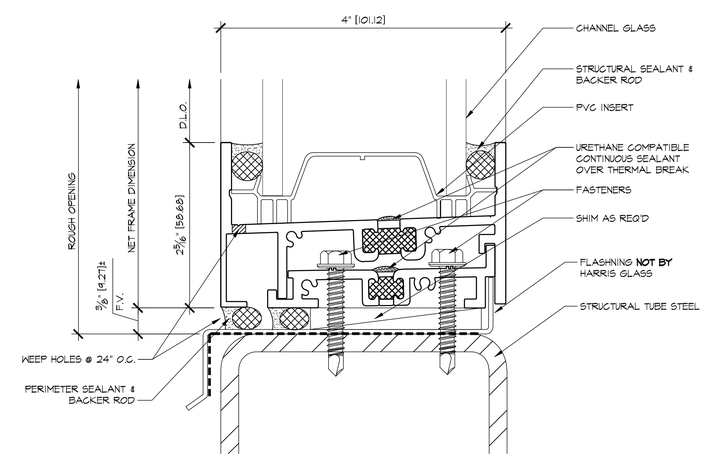

3 / 5.12 SILL
ARCH'L: 15/A7.3

SAMPLE

REVISIONS	BY
△	
△	
△	
△	
△	

BMR
DRAFTING SERVICE
SINCE 1988
23846 SUNNYMEAD BLVD.
SUITE #6
MORENO VALLEY, CA 92553
B: (951) 243-7614
F: (951) 243-7673

HARRIS GLASS CO.
6918 SOUTH ATLANTIC AVENUE
BELL, CA 90201

JOB NAME: SILVER LAKE BRANCH LIBRARY
ARCHITECT: M2A
SHEET DESCRIPTION: DETAILS

DATE: 9/10/07
SCALE: FULL
DRAWN: CTB
JOB NO: 066-07
SHEET NO: 5.12

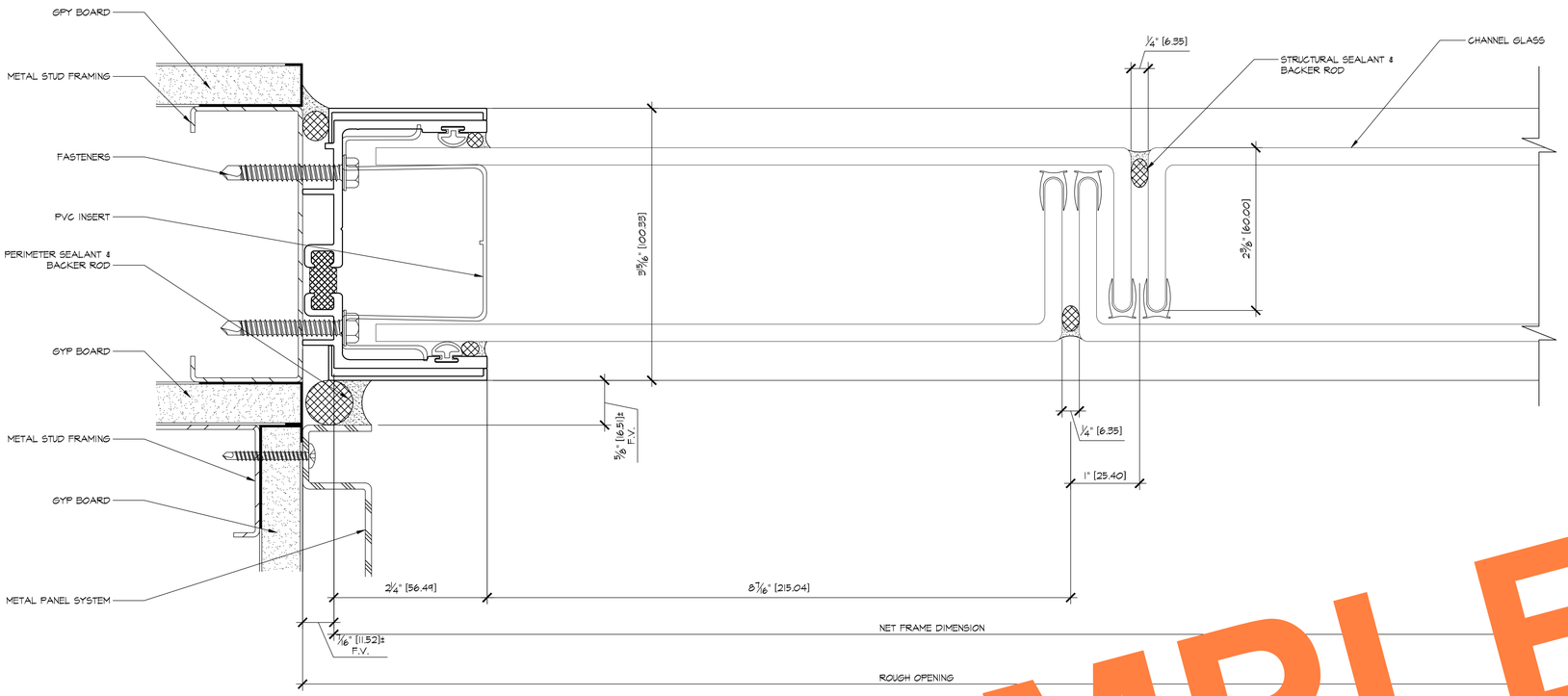

1 / 5.13 JAMB
ARCH'L: 19/A7.4

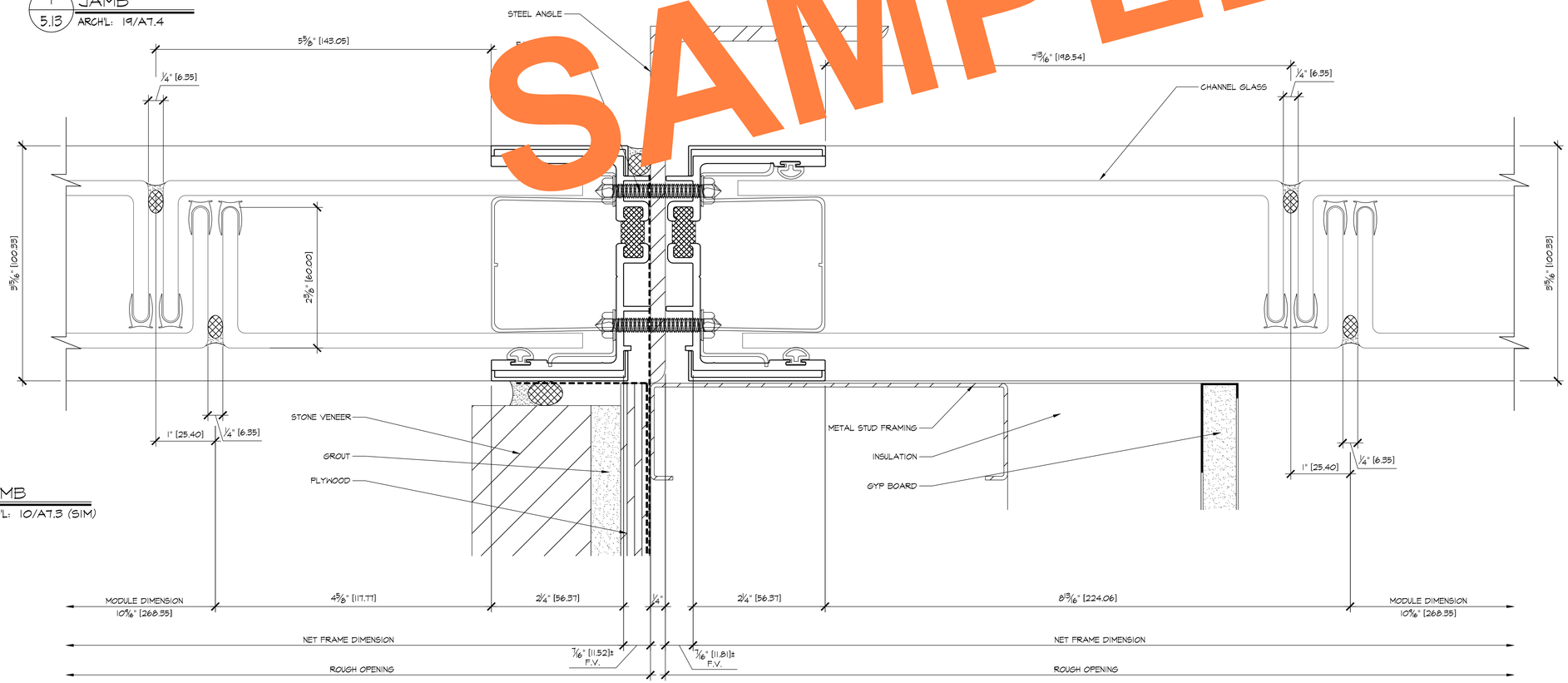

2 / 5.13 JAMB
ARCH'L: 10/A7.3 (SIM)

SAMPLE

REVISIONS	BY
△	
△	
△	
△	
△	

BMR
DRAFTING SERVICE
SINCE 1988
23846 SUNNYMEAD BLVD.
SUITE #6
MORENO VALLEY, CA 92553
B: (951) 243-7614
F: (951) 243-7673

HARRIS GLASS CO.
6918 SOUTH ATLANTIC AVENUE
BELL, CA 90201

JOB NAME: SILVER LAKE BRANCH LIBRARY
ARCHITECT: M2A
SHEET DESCRIPTION: DETAILS
DATE: 9/10/07
SCALE: FULL
DRAWN: CTB
JOB NO: 066-07
SHEET NO: 5.13

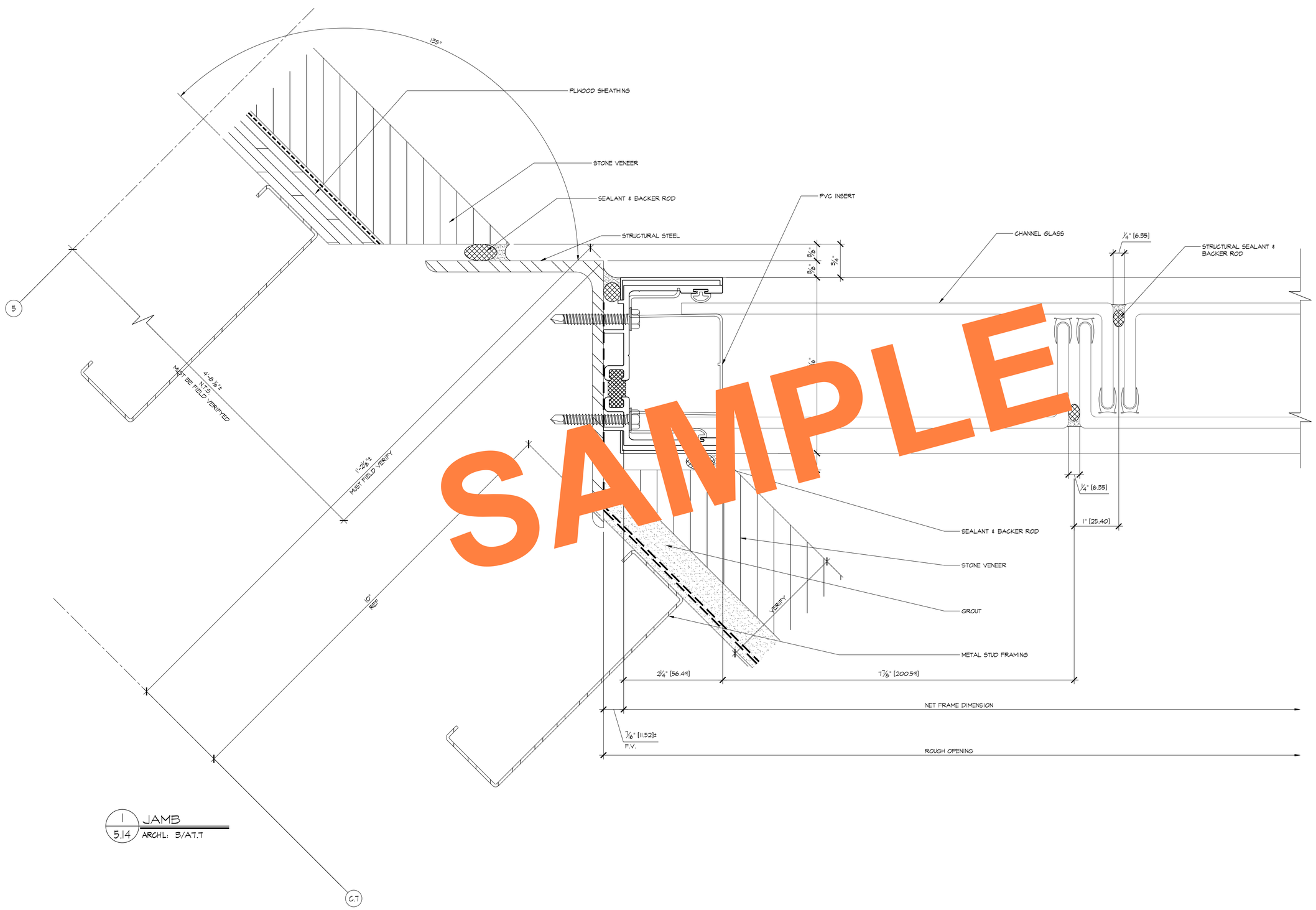

1 / 5.14 JAMB
ARCH'L: 3/A7.7

SAMPLE

REVISIONS	BY
△	
△	
△	
△	
△	

BMR
DRAFTING SERVICE
SINCE 1988
23846 SUNNYMEAD BLVD.
SUITE #6
MORENO VALLEY, CA 92553
B: (951) 243-7614
F: (951) 243-7673

HARRIS GLASS CO.
6918 SOUTH ATLANTIC AVENUE
BELL, CA 90201

JOB NAME: SILVER LAKE BRANCH LIBRARY
ARCHITECT: M2A
SHEET DESCRIPTION: DETAILS

DATE: 9/10/07
SCALE: FULL
DRAWN: CTB
JOB NO: 066-07
SHEET NO: 5.14

1 / 5.15 CHANNEL GLASS CORNER
ARCH'L: 14/A7.7

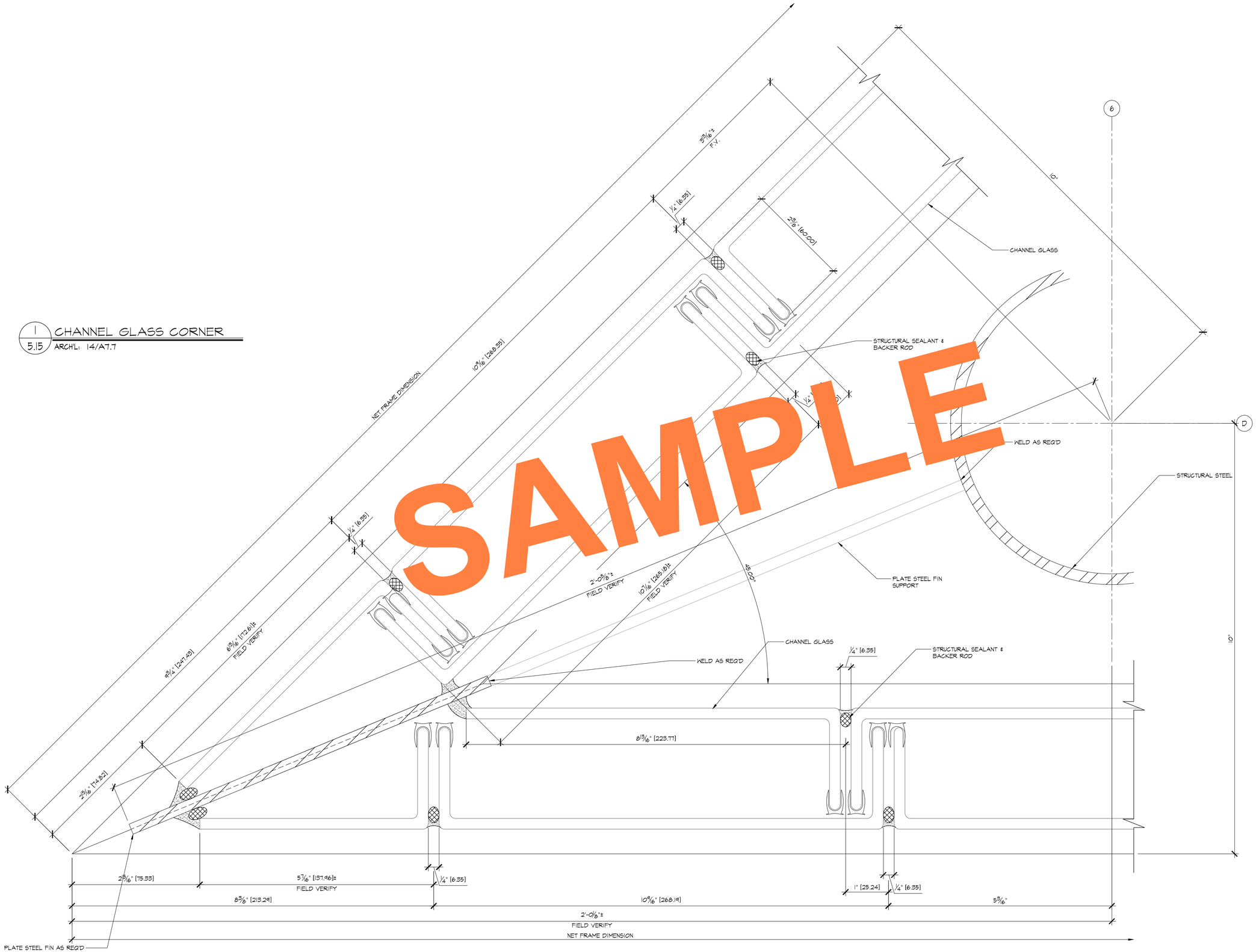

SAMPLE

REVISIONS	BY
△	
△	
△	
△	
△	

BMR
DRAFTING SERVICE
SINCE 1988
23846 SUNNYMEAD BLVD.
SUITE #6
MORENO VALLEY, CA 92553
B: (951) 243-7614
F: (951) 243-7673

HARRIS GLASS CO.
6918 SOUTH ATLANTIC AVENUE
BELL, CA 90201

JOB NAME: SILVER LAKE BRANCH LIBRARY
ARCHITECT: M2A
SHEET DESCRIPTION: DETAILS

DATE: 9/10/07
SCALE: FULL
DRAWN: CTB
JOB NO: 066-07
SHEET NO: 5.15

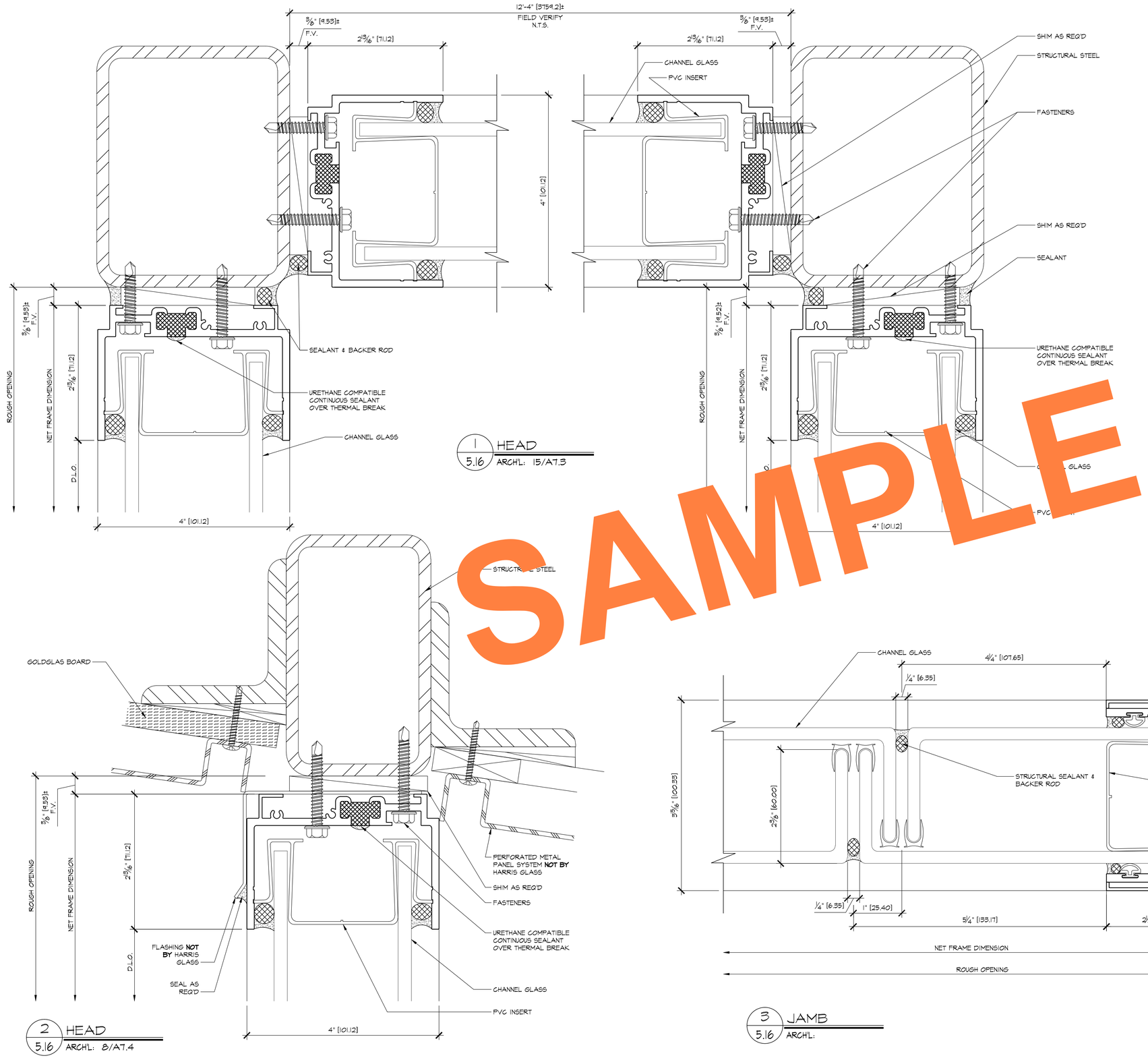

SAMPLE

REVISIONS	BY
△	
△	
△	
△	
△	

BMR
DRAFTING SERVICE
SINCE 1988
23846 SUNNYMEAD BLVD.
SUITE #6
MORENO VALLEY, CA 92553
B: (951) 243-7614
F: (951) 243-7673

HARRIS GLASS CO.
6918 SOUTH ATLANTIC AVENUE
BELL, CA 90201

JOB NAME: SILVER LAKE BRANCH LIBRARY
ARCHITECT: M2A
SHEET DESCRIPTION: DETAILS

DATE: 9/10/07
SCALE: FULL
DRAWN: CTB
JOB NO: 066-07
SHEET NO: 5.16

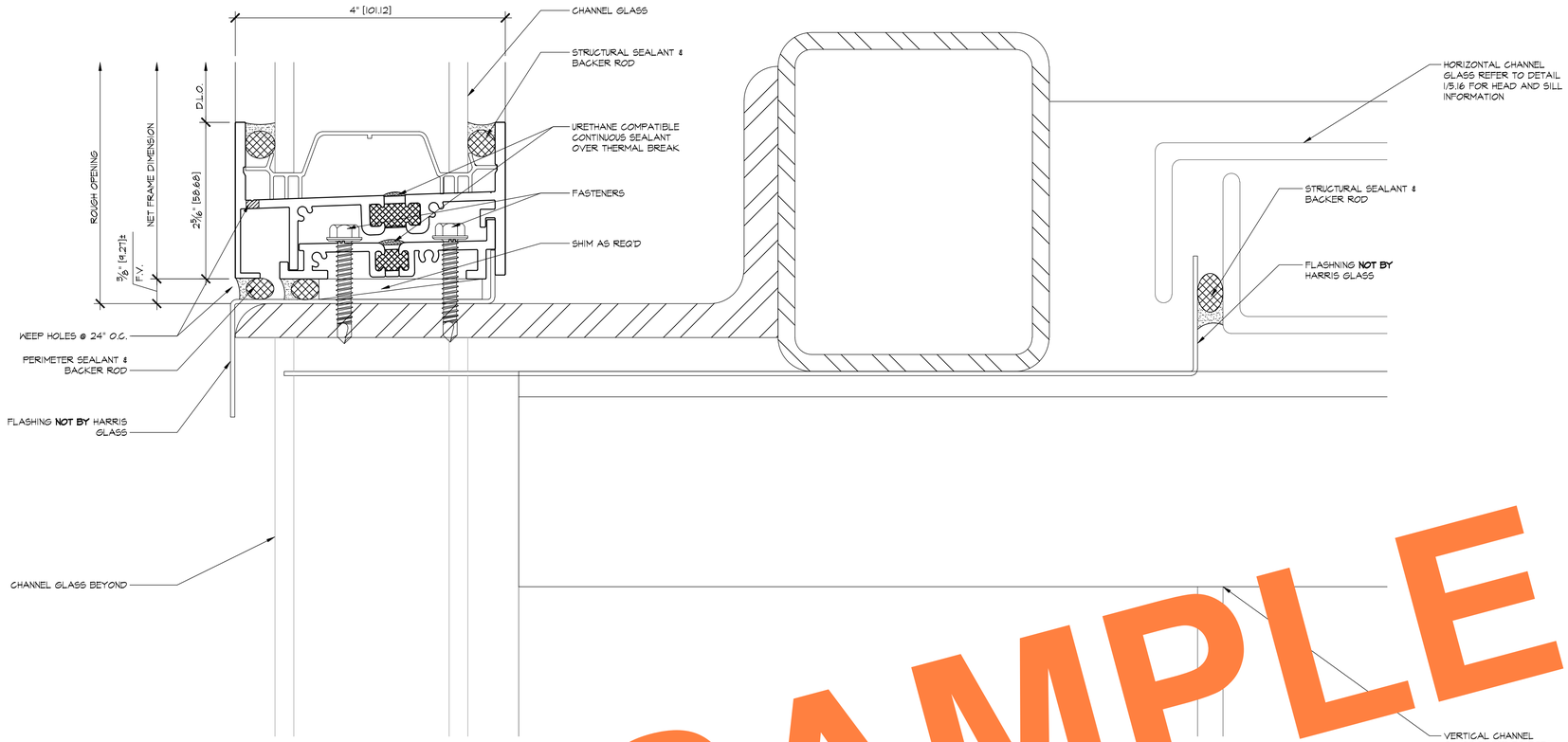

1 / 5.17 SILL
ARCH'L: 17/A7.3

SAMPLE

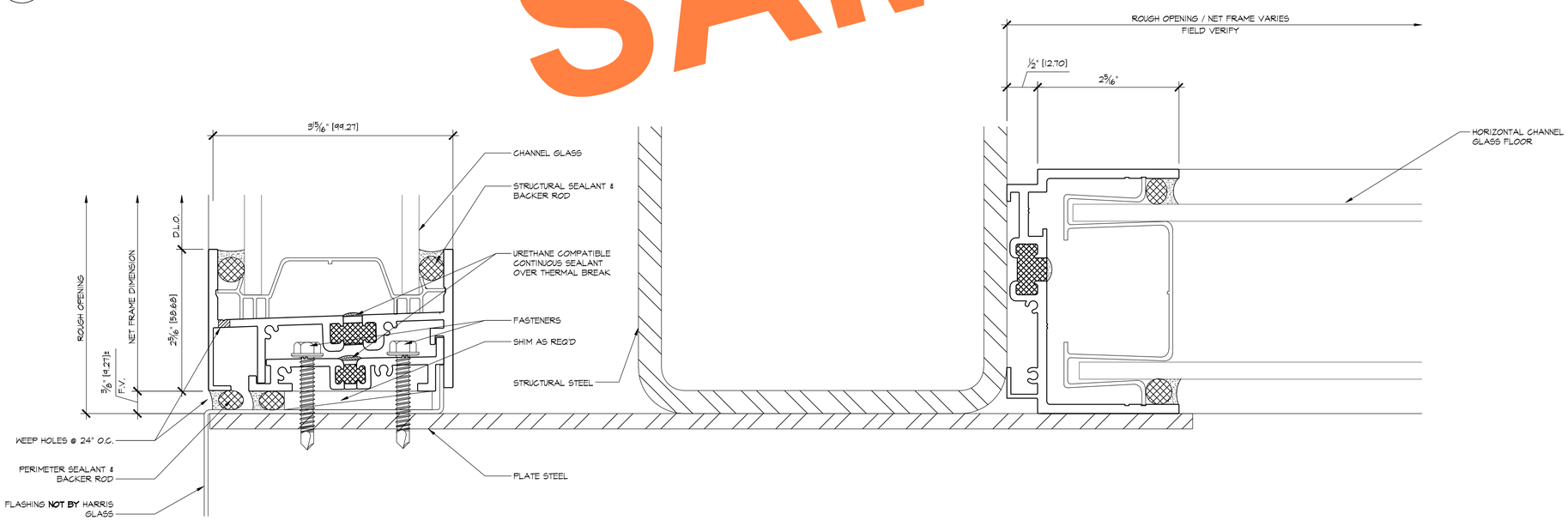

2 / 5.17 SILL
ARCH'L: 4/A7.2

REVISIONS	BY
△	
△	
△	
△	
△	

BMR
DRAFTING SERVICE
SINCE 1988
23846 SUNNYMEAD BLVD.
SUITE #6
MORENO VALLEY, CA 92553
B: (951) 243-7614
F: (951) 243-7673

HARRIS GLASS CO.
6918 SOUTH ATLANTIC AVENUE
BELL, CA 90201

JOB NAME: SILVER LAKE BRANCH LIBRARY
ARCHITECT: M2A
SHEET DESCRIPTION: DETAILS
DATE: 9/10/07
SCALE: FULL
DRAWN: CTB
JOB NO: 066-07
SHEET NO: 5.17

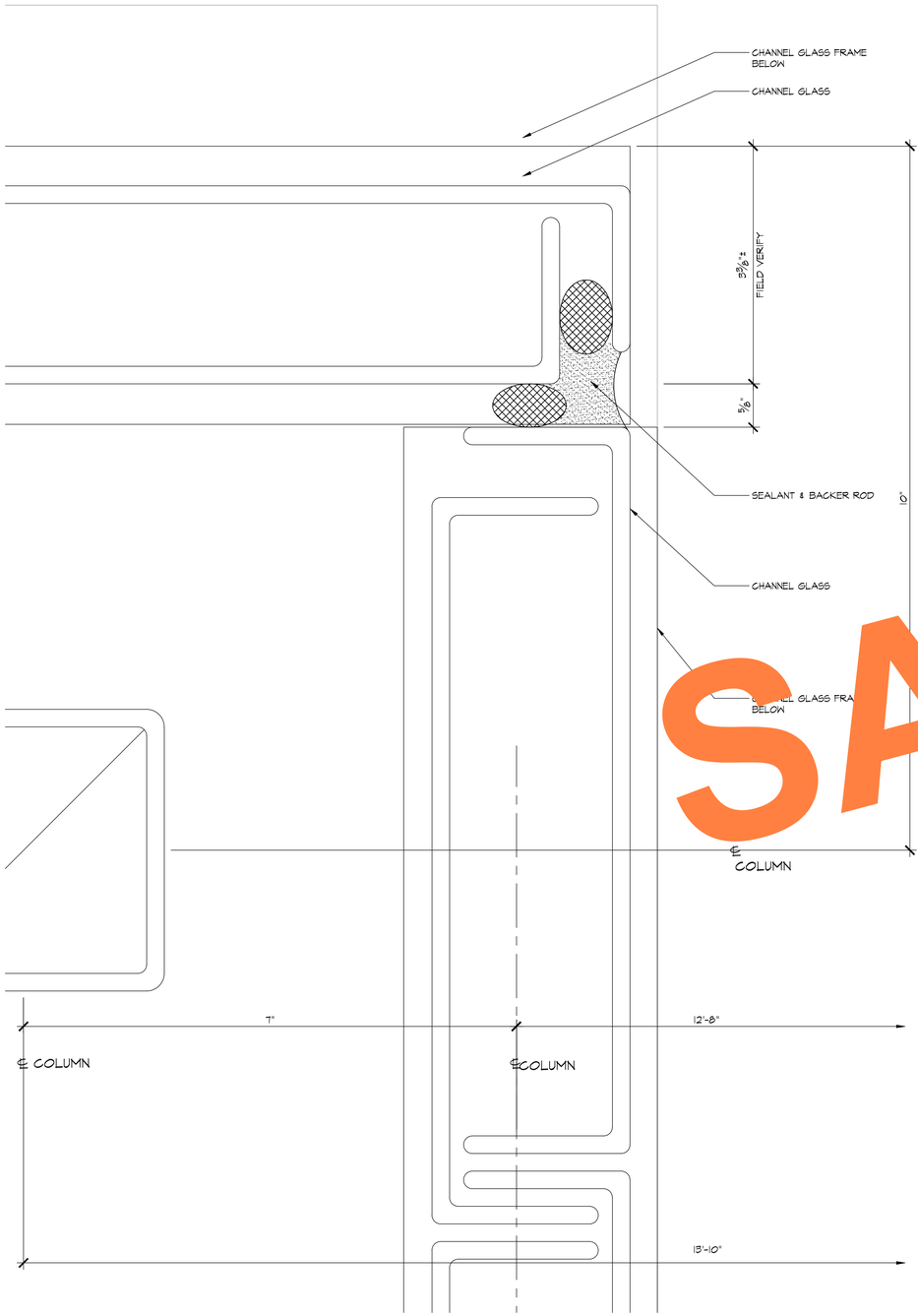

1 5.18 JAMB
ARCH'L: 19/A7.3

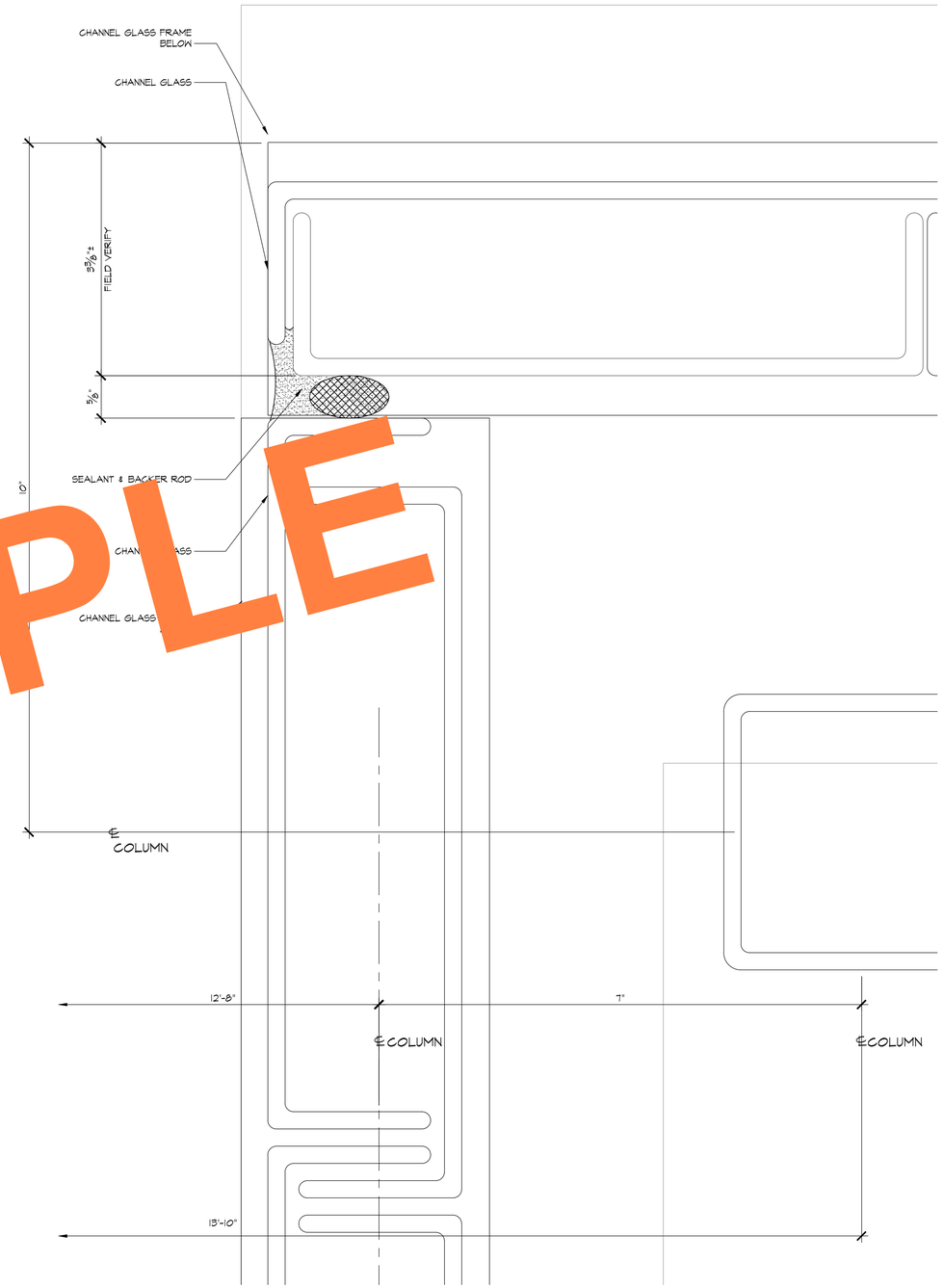

2 5.18 JAMB
ARCH'L: 19/A7.3

N

SAMPLE

REVISIONS	BY
△	
△	
△	
△	
△	

BMR
DRAFTING SERVICE
SINCE 1988
23846 SUNNYMEAD BLVD.
SUITE #6
MORENO VALLEY, CA 92553
B: (951) 243-7614
F: (951) 243-7673

HARRIS GLASS CO.
6918 SOUTH ATLANTIC AVENUE
BELL, CA 90201

JOB NAME: SILVER LAKE BRANCH LIBRARY
ARCHITECT: M2A
SHEET DESCRIPTION: DETAILS

DATE: 9/10/07
SCALE: FULL
DRAWN: CTB
JOB NO: 066-07
SHEET NO: 5.18

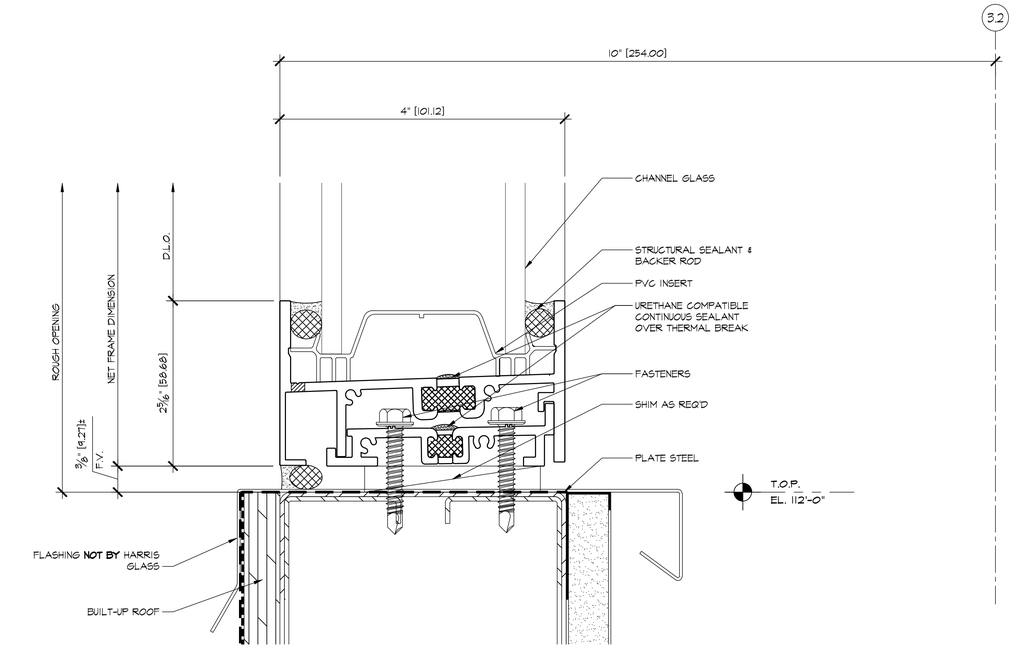

1 / 5.19 SILL
ARCH'L:

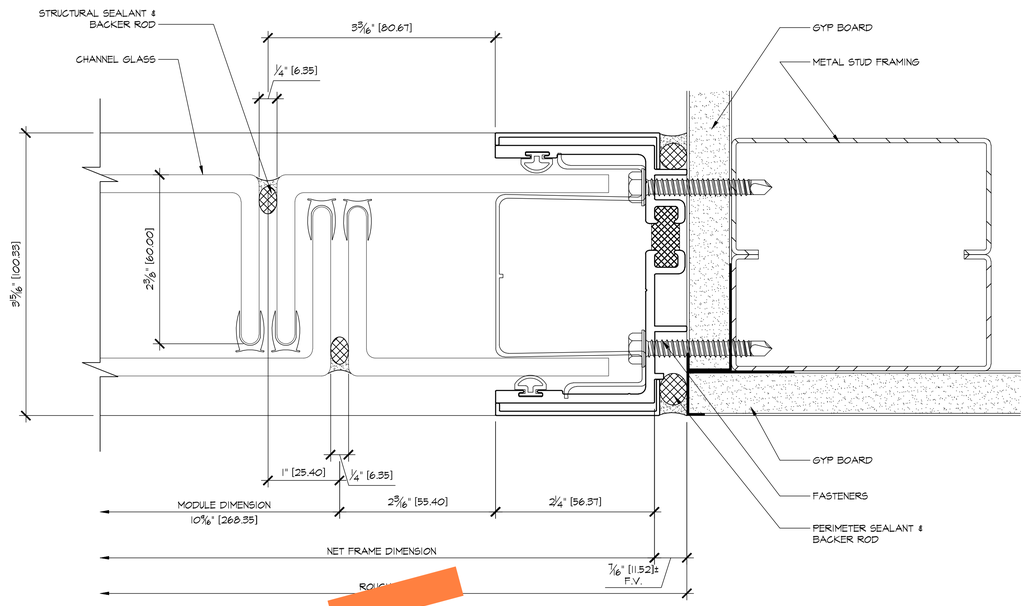

3 / 5.19 JAMB
ARCH'L:

SAMPLE

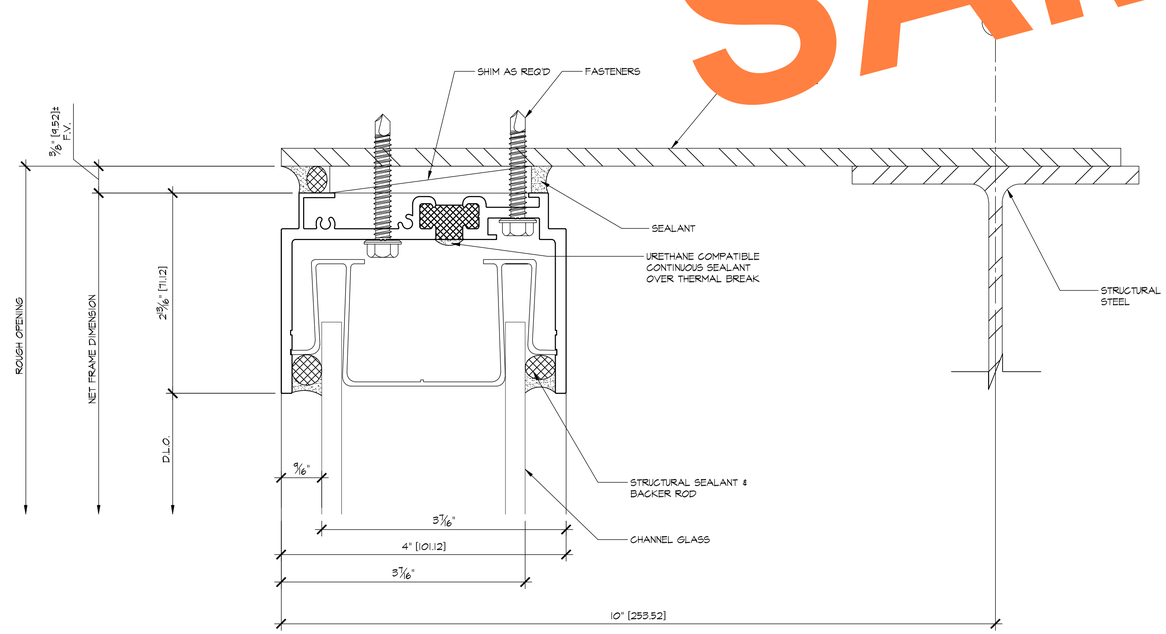

2 / 5.19 HEAD
ARCH'L:

REVISIONS	BY
△	
△	
△	
△	
△	

BMR
DRAFTING SERVICE
SINCE 1988
23846 SUNNYMEAD BLVD.
SUITE #6
MORENO VALLEY, CA 92553
B: (951) 243-7614
F: (951) 243-7673

HARRIS GLASS CO.
6918 SOUTH ATLANTIC AVENUE
BELL, CA 90201

JOB NAME: SILVER LAKE BRANCH LIBRARY
ARCHITECT: M2A
SHEET DESCRIPTION: DETAILS

DATE: 2-20-08
SCALE: FULL
DRAWN: CTB
JOB NO: 066-07
SHEET NO: 5.19

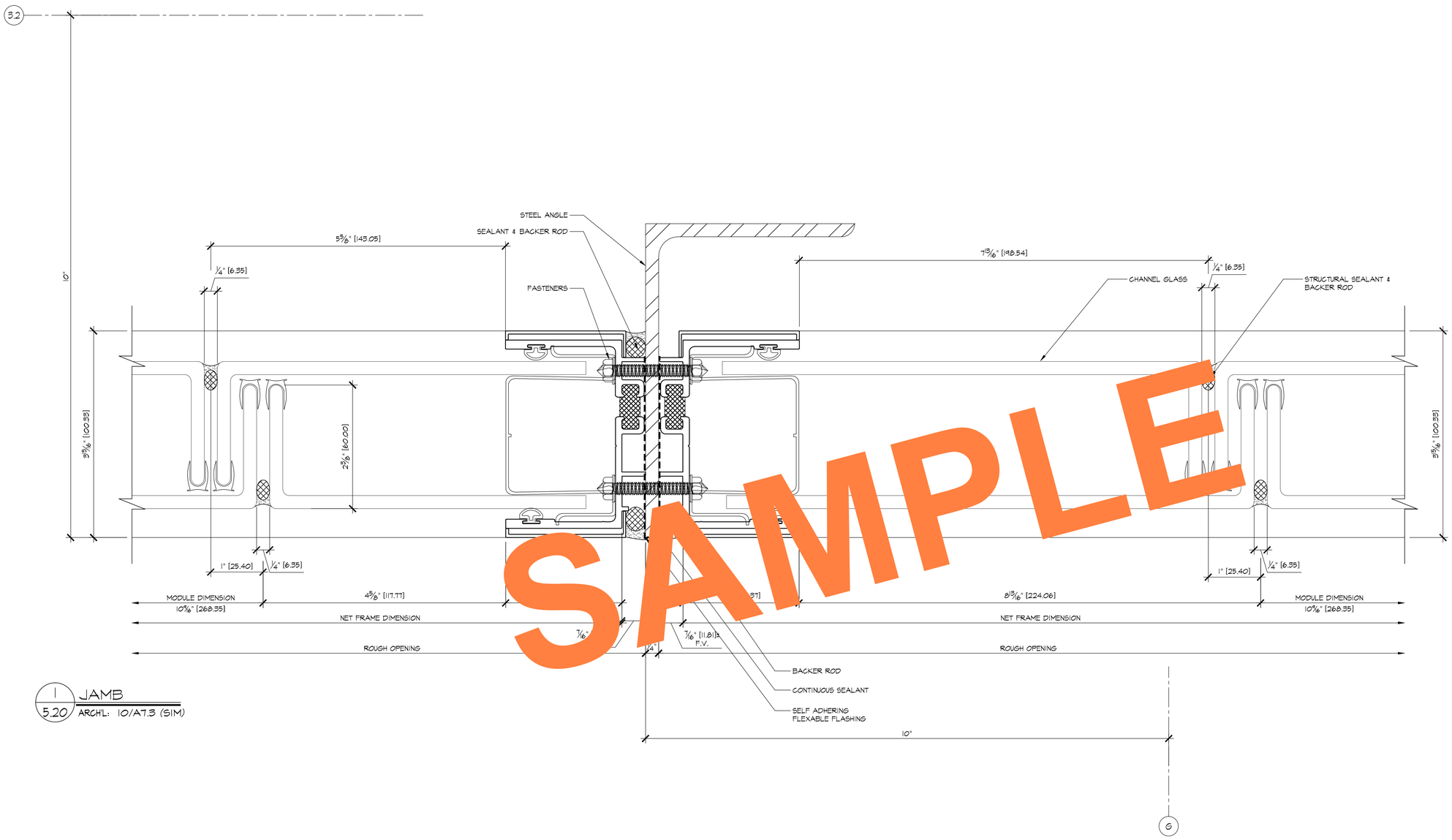

1 / 5.20 JAMB
ARCH'L: 10/A7.3 (SIM)

SAMPLE

REVISIONS	BY
△	
△	
△	
△	
△	

BMR
DRAFTING SERVICE
SINCE 1988
23846 SUNNYMEAD BLVD.
SUITE #6
MORENO VALLEY, CA 92553
B: (951) 243-7614
F: (951) 243-7673

HARRIS GLASS CO.
6918 SOUTH ATLANTIC AVENUE
BELL, CA 90201

JOB NAME: SILVER LAKE BRANCH LIBRARY
ARCHITECT: M2A
SHEET DESCRIPTION: DETAILS

DATE: 2-20-08
SCALE: FULL
DRAWN: CTB
JOB NO: 066-07
SHEET NO: 5.20

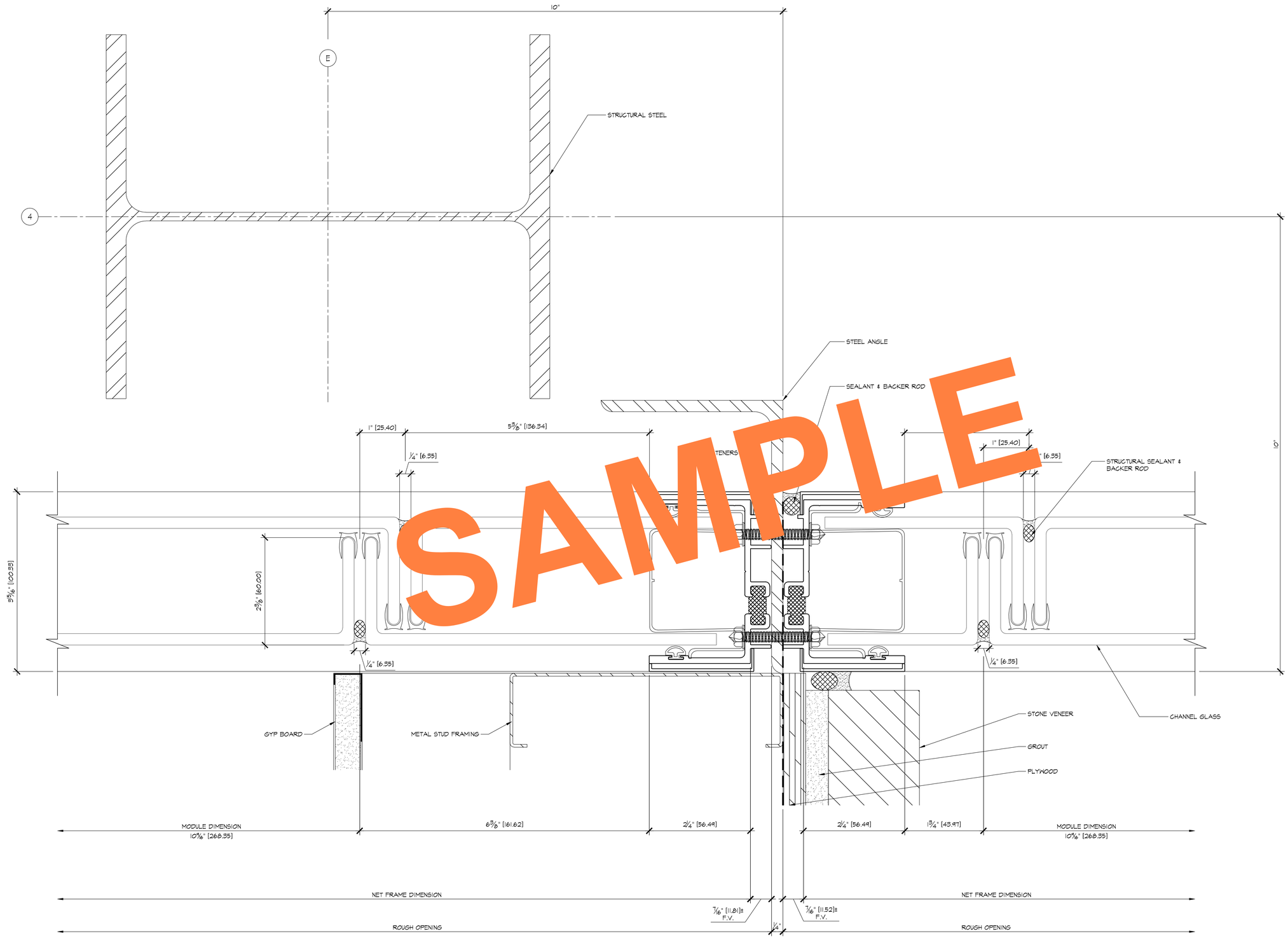

SAMPLE

1 / 5.21 JAMB
ARCH'L: 10/A7.3

REVISIONS	BY
△	
△	
△	
△	
△	

BMR
DRAFTING SERVICE
SINCE 1988
23846 SUNNYMEAD BLVD.
SUITE #6
MORENO VALLEY, CA 92553
B: (951) 243-7614
F: (951) 243-7673

HARRIS GLASS CO.
6918 SOUTH ATLANTIC AVENUE
BELL, CA 90201

JOB NAME: SILVER LAKE BRANCH LIBRARY
ARCHITECT: M2A
SHEET DESCRIPTION: DETAILS

DATE: 2-20-08
SCALE: FULL
DRAWN: CTB
JOB NO: 066-07
SHEET NO: 5.21

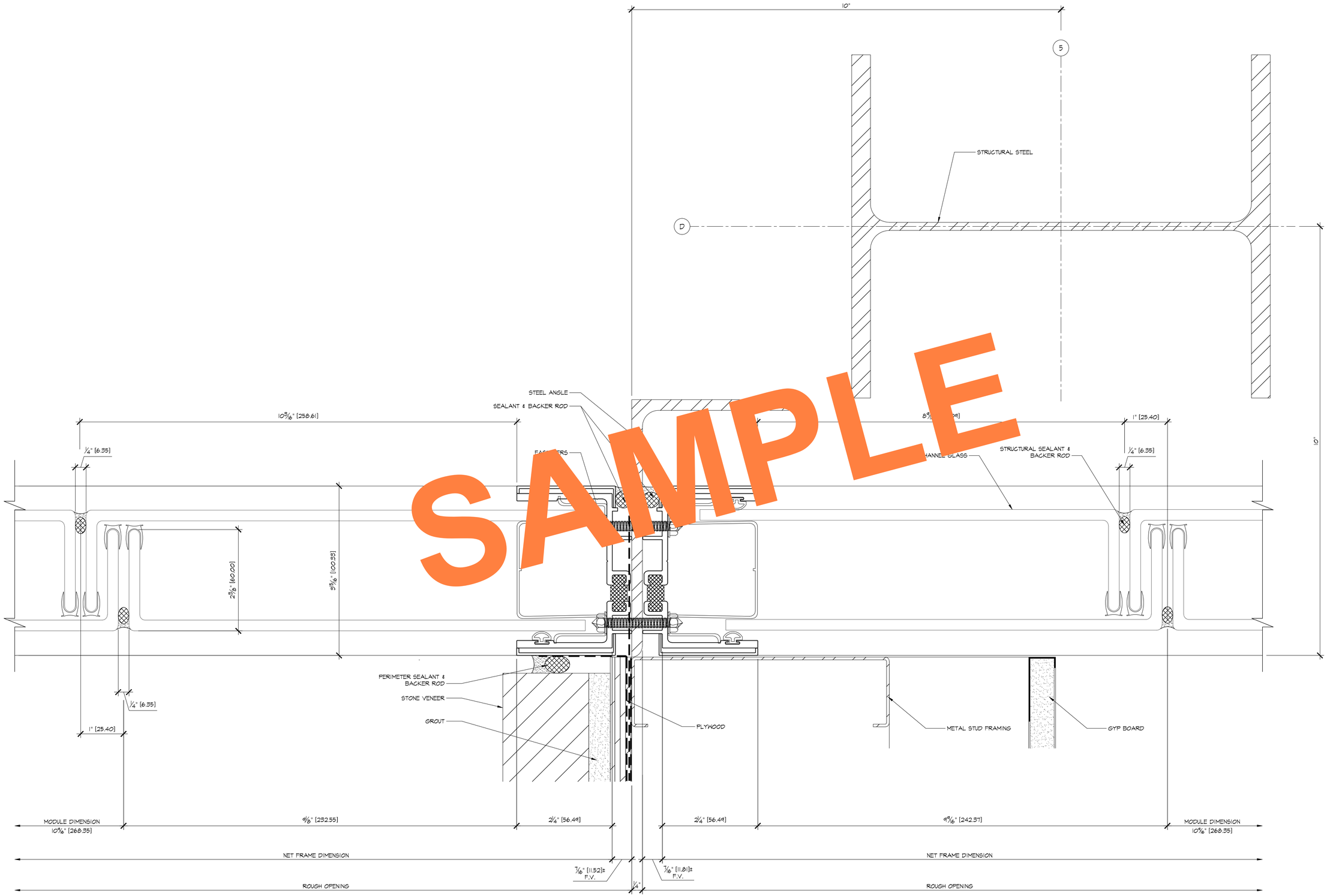

SAMPLE

1 / 5.22 JAMB
ARCH'L: 10/A7.3

REVISIONS	BY
△	
△	
△	
△	
△	

BMR
DRAFTING SERVICE
SINCE 1988
23846 SUNNYMEAD BLVD.
SUITE #6
MORENO VALLEY, CA 92553
B: (951) 243-7614
F: (951) 243-7673

HARRIS GLASS CO.
6918 SOUTH ATLANTIC AVENUE
BELL, CA 90201

JOB NAME: SILVER LAKE BRANCH LIBRARY
ARCHITECT: M2A
SHEET DESCRIPTION: DETAILS

DATE: 2-20-08
SCALE: FULL
DRAWN: CTB
JOB NO: 066-07
SHEET NO: 5.22