INLAND REGIONAL CENTER BTS.

WATERMAN AVE.

SAN BERNARDINO, CALIFORNIA

SAMPLE

DOOR SCHEDULE

BUILDING - 1

DR#	DOOR OPENING	STILE	HUNG	SWING	HINGED	HDWR
1111	3'-0 X 7'-0"	Narrow	Offset	Out	Left	--
1111a	3'-0" X 7'-0"	Narrow	Offset	Out	Left	--
1114	3'-0" X 7'-0"	Narrow	Offset	Out	Right	--
1115	6'-0" X 7'-0"	Narrow	Offset	Out	Pair	--
1116	3'-0" X 7'-0"	Narrow	Offset	Out	Left	--

BUILDING - 2

DR#	DOOR OPENING	STILE	HUNG	SWING	HINGED	HDWR
2111	3'-0 X 7'-0"	Narrow	Offset	Out	Right	--
2114	6'-0" X 7'-0"	Narrow	Offset	Out	Pair	--
2115	6'-0" X 7'-0"	Narrow	Offset	Out	Pair	--
2116	3'-0" X 7'-0"	Narrow	Offset	Out	Left	--

BUILDING - 3

DR#	DOOR OPENING	STILE	HUNG	SWING	HINGED	HDWR
3101	6'-0 X 7'-0"	Narrow	Offset	Out	Pair	--
3101a	6'-0" X 7'-0"	Narrow	Offset	Out	Pair	--
3101b	6'-0" X 7'-0"	Narrow	Offset	Out	Pair	--
3101c	3'-0" X 7'-0"	Narrow	Offset	Out	Right	--
3101d	3'-0" X 7'-0"	Narrow	Offset	Out	Left	--
3101e	3'-0" X 7'-0"	Narrow	Offset	Out	Right	--
3105	3'-0" X 7'-0"	Narrow	Offset	Out	Right	--
3107	6'-0" X 7'-0"	Narrow	Offset	Out	Pair	--
3108	6'-0" X 6'-11 5/8"	Narrow	Offset	Out	Pair	--
3111	3'-0" X 6'-11 5/8"	Narrow	Offset	Out	Left	--
3201	3'-0" X 7'-0"	Narrow	Offset	Out	Right	--
3201a	3'-0" X 7'-0"	Narrow	Offset	Out	Left	--

BUILDING - LOBBY

DR#	DOOR OPENING	STILE	HUNG	SWING	HINGED	HDWR
201	3'-0 X 8'-0"	Narrow	Offset	Out	Right	--

HARDWARE SCHEDULE

REFER TO HARDWARE SPECIFICATIONS

ELEVATION SYMBOLS	
◆	DENOTES **JAMB ANCHORS LUG**, REFER TO RESPECTIVE DETAILS FOR MORE INFORMATION
▲	DENOTES **MID SPAN ANCHORS**, REFER TO DETAIL 3/5.19 FOR MORE INFORMATION

GLAZING SCHEDULE

1" INSULATED VISTEON BRONZE RC **VISION GLAZING** UNITS (OUTBOARD LITE: 1/4" THK. VISTEON BRONZE RC VISION GLASS WITH A 1/2" AIR SPACE; INBOARD LITE: 1/4" THK. CLEAR GLASS)

1" INSULATED VISTEON BRONZE RC **SPANDREL GLAZING** UNITS (OUTBOARD LITE: 1/4" THK. VISTEON BRONZE RC VISION GLASS WITH A 1/2" AIR SPACE; INBOARD LITE: 1/4" THK. CLEAR GLASS WITH AN OPACICOAT ON SURFACE #4)

1/4" THICK CLEAR GLASS WITH AN OPACICOAT ON SURFACE #2 **SPANDREL GLAZING**

T DENOTES TEMPERED GLASS AS REQUIRED

ALUMINUM FRAME FINISH

TYPE: PAINTED - 4 COAT FINISH

COLOR: BRIGHT COPPER - UC5211XL/BC

ALUMINUM FRAME SYSTEM

ARCADIA, INC.

SERIES: T-500 (OPG-3000)
2 1/4" X 10" (Vert.) 6" (Horiz.)

SERIES: AG-451
2" X 4 1/2" CENTER GLAZED SYSTEM

SERIES: AFG-451
2" X 4 1/2" OFFEST GLAZING SYSTEM

SERIES: AF-175
2" X 1 3/4" OFFSET GLAZING SYSTEM

FASTENER NOTE:

1. WHEREVER POSSIBLE **1/4"Φ TAPCON FASTENERS** WILL BE USED IN LIEU OF WEDGE ANCHORS - TYPICAL

DESIGN CRITERIA

WIND:	85 M.P.H.
EXPOSURE:	C
BUILDING HEIGHT:	1 & 2 = 44'-6"; 3 = 34'-6"

ABBREVIATIONS

A.F.F.	~	ABOVE FINISH FLOOR
B.O.M.	~	BOTTOM OF MULLION
℄	~	CENTER LINE
DLO	~	DAYLIGHT OPENING
D.O.	~	DOOR OPENING
F.F.	~	FINISH FLOOR
F.O.C.	~	FACE OF CONCRETE
F.O.M.	~	FACE OF MULLION
F.V.	~	FIELD VERIFY
MEZZ.	~	MEZZANINE FLOOR
N.F.D.	~	NET FRAME DIMENSION
R.C.P.	~	RECESSED CONCRETE PANEL
R.O.	~	ROUGH OPENING
S.O.M.	~	SIDE OF MULLION
T.O.M.	~	TOP OF MULLION
W.R.O.	~	WINDOW ROUGH OPENING

REVISIONS	BY
△	
△	
△	
△	
△	

BMR
DRAFTING SERVICE
SINCE 1988
23846 SUNNYMEAD BLVD.
SUITE #6
MORENO VALLEY, CA 92553
B: (951) 243-7614
F: (951) 243-7673

GLASS FACTORY
26383 BASE LINE
HIGHLAND, CA 92346

JOB NAME: INLAND REGIONAL CENTER BTS
ARCHITECT: WARE MALCOMB
SHEET DESCRIPTION: COVER SHEET

DATE: 10-30-08
SCALE:
DRAWN: MAC/BMR
JOB NO: 068-08
SHEET NO: 1.01

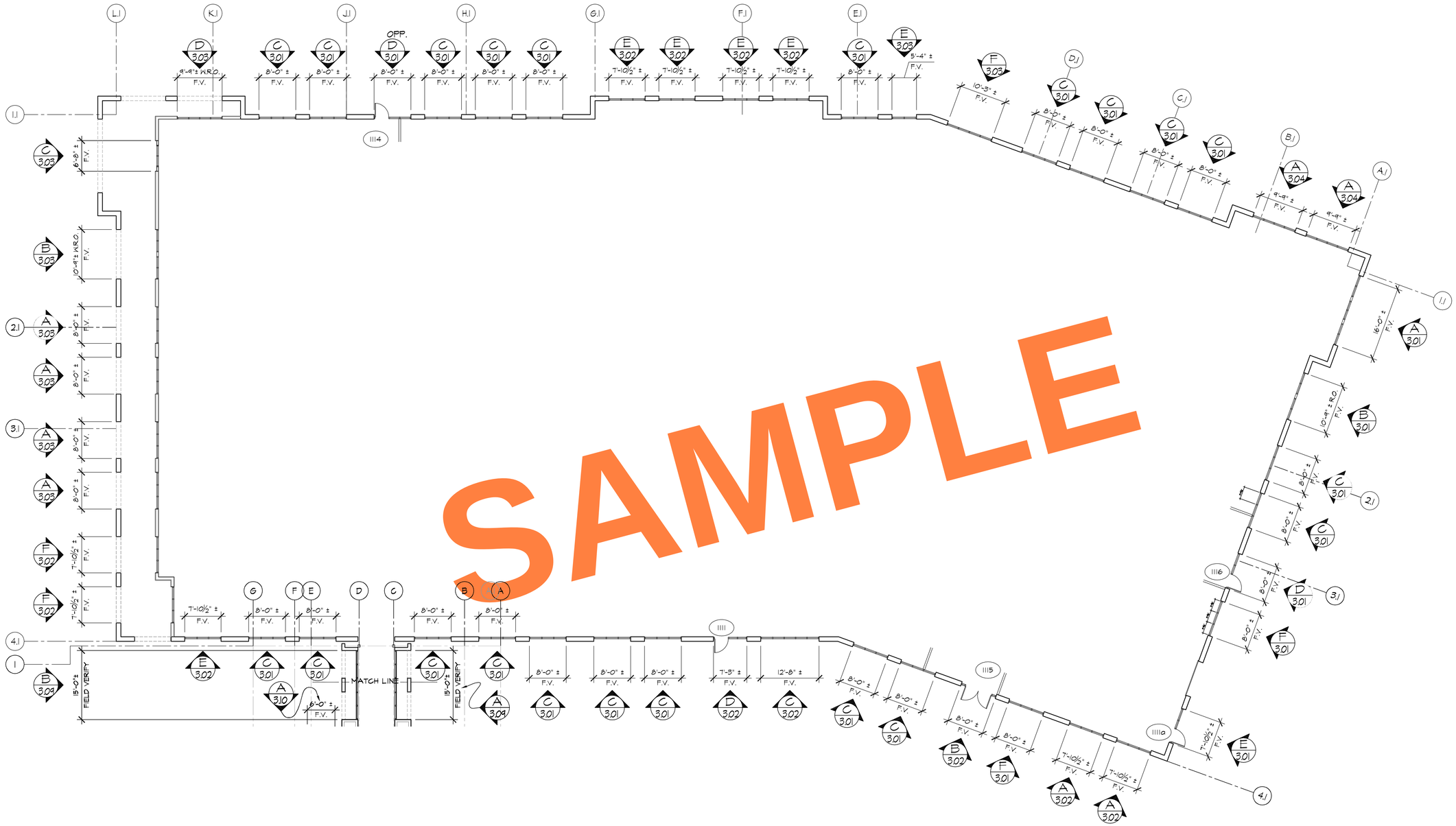

PARTIAL 1ST. FLOOR PLAN

REF. ARCH'L - A2.1a

BUILDING - 1

N

REVISIONS	BY
△	
△	
△	
△	
△	

BMR
DRAFTING SERVICE
SINCE 1988
23846 SUNNYMEAD BLVD.
SUITE #6
MORENO VALLEY, CA 92553
B: (951) 243-7614
F: (951) 243-7673

GLASS FACTORY
26383 BASE LINE
HIGHLAND, CA 92346

JOB NAME: INLAND REGIONAL CENTER BTS

ARCHITECT: WARE MALCOMB

SHEET DESCRIPTION: 1st FLOOR PLAN - BLDG 1

DATE: 10-30-08

SCALE: 3/32"=1'-0"

DRAWN: MAC/BMR

JOB NO: 068-08

SHEET NO: 2.01

PARTIAL 1ST. FLOOR PLAN

REF. ARCH'L - A2.1b

BUILDING - 2

N

REVISIONS	BY
△	
△	
△	
△	
△	

BMR
DRAFTING SERVICE
SINCE 1988
23846 SUNNYMEAD BLVD.
SUITE #6
MORENO VALLEY, CA 92553
B: (951) 243-7614
F: (951) 243-7673

GLASS FACTORY
26383 BASE LINE
HIGHLAND, CA 92346

JOB NAME: INLAND REGIONAL CENTER BTS

ARCHITECT: WARE MALCOMB

SHEET DESCRIPTION: 1st FLOOR PLAN - BLDG 2

DATE: 10-30-08

SCALE: 3/32"=1'-0"

DRAWN: MAC/BMR

JOB NO: 068-08

SHEET NO: 2.02

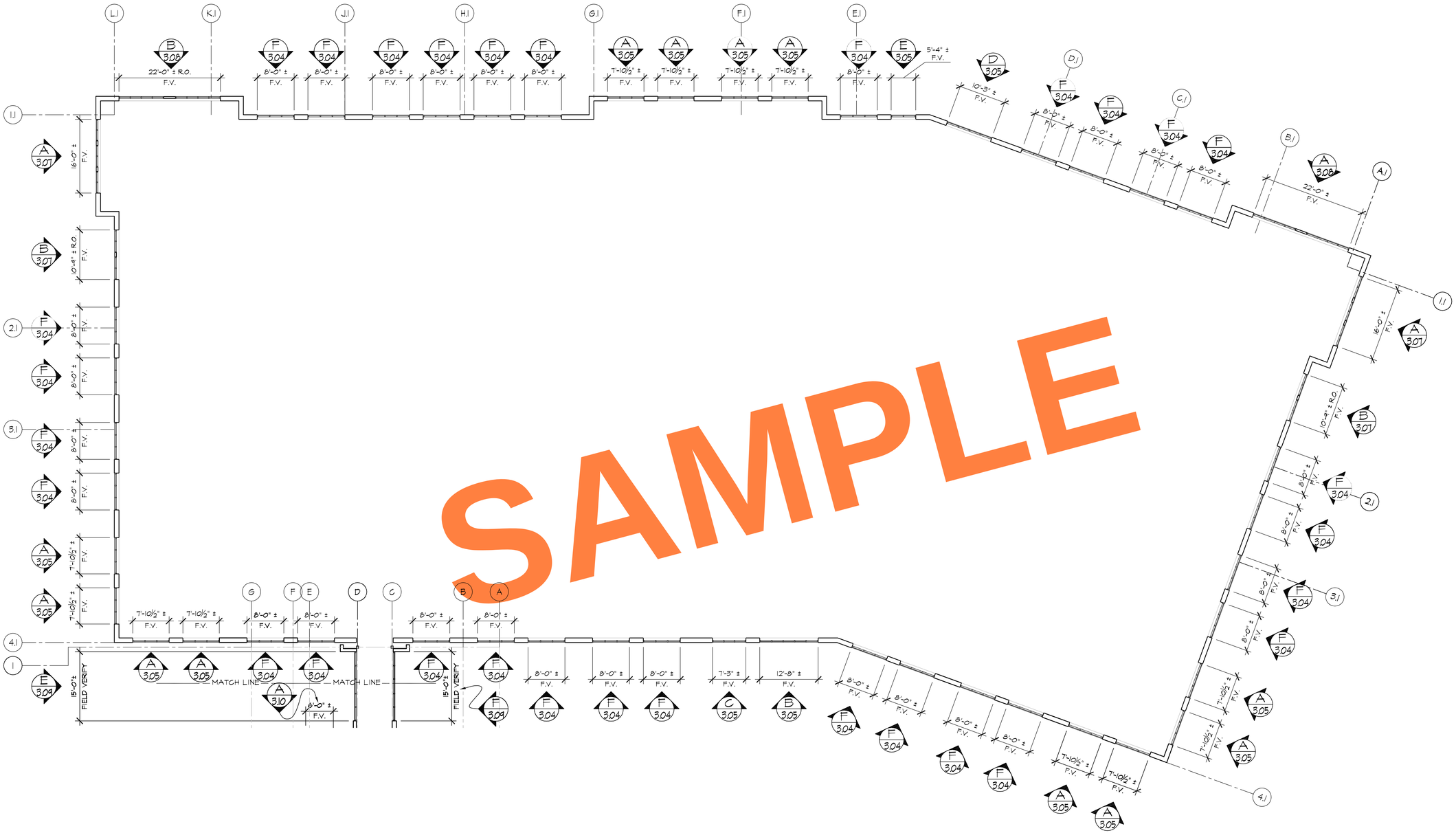

PARTIAL 2ND. FLOOR PLAN

REF. ARCH'L - A2.2a

BUILDING - 1

REVISIONS	BY
△	
△	
△	
△	
△	

BMR
DRAFTING SERVICE
SINCE 1988
23846 SUNNYMEAD BLVD.
SUITE #6
MORENO VALLEY, CA 92553
B: (951) 243-7614
F: (951) 243-7673

GLASS FACTORY
26383 BASE LINE
HIGHLAND, CA 92346

JOB NAME: INLAND REGIONAL CENTER BTS

ARCHITECT: WARE MALCOMB

SHEET DESCRIPTION: 2nd FLOOR PLAN - BLDG 1

DATE: 10-30-08

SCALE: 3/32"=1'-0"

DRAWN: MAC/BMR

JOB NO: 068-08

SHEET NO: 2.03

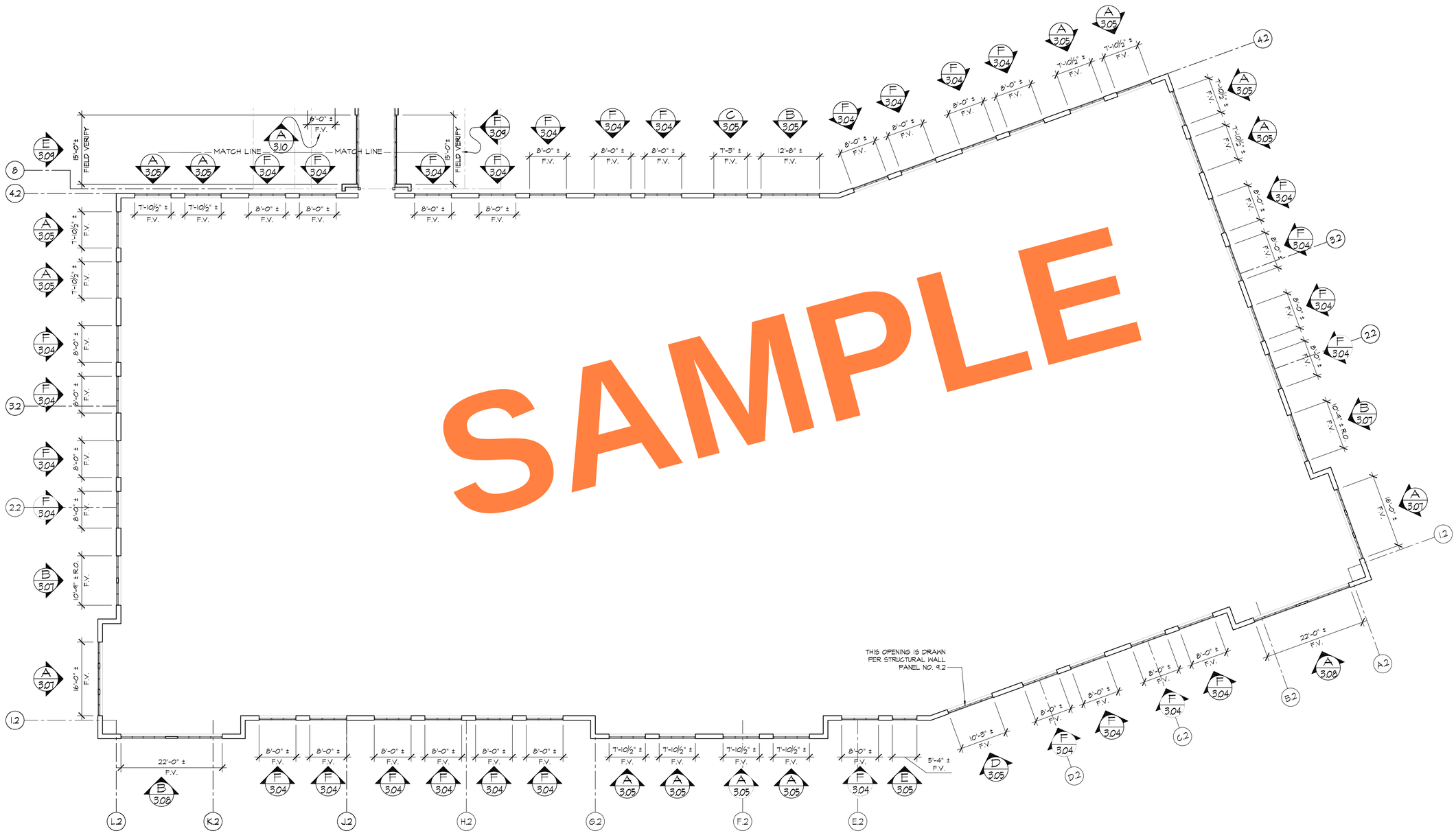

PARTIAL 2ND. FLOOR PLAN

REF. ARCH'L - A2.2b

BUILDING - 2

N

REVISIONS	BY
△	
△	
△	
△	
△	

BMR
DRAFTING SERVICE
SINCE 1988
23846 SUNNYMEAD BLVD.
SUITE #6
MORENO VALLEY, CA 92553
B: (951) 243-7614
F: (951) 243-7673

GLASS FACTORY
26383 BASE LINE
HIGHLAND, CA 92346

JOB NAME: INLAND REGIONAL CENTER BTS

ARCHITECT: WARE MALCOMB

SHEET DESCRIPTION: 2nd FLOOR PLAN - BLDG 2

DATE: 10-30-08

SCALE: 3/32"=1'-0"

DRAWN: MAC/BMR

JOB NO: 068-08

SHEET NO: 2.04

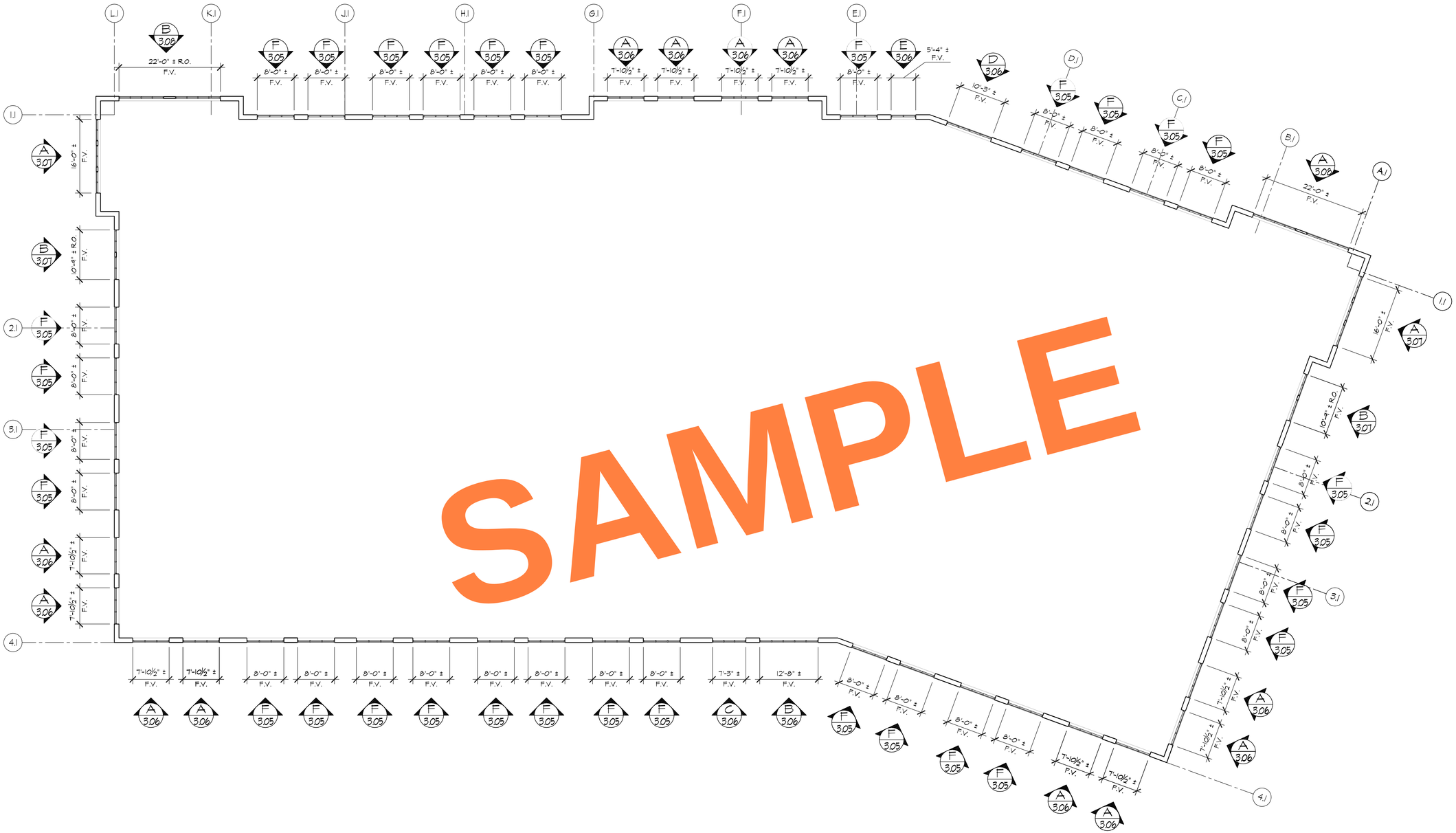

PARTIAL 3RD. FLOOR PLAN

REF. ARCH'L - A2.3a

BUILDING - 1

N

REVISIONS	BY
△	
△	
△	
△	
△	

BMR
DRAFTING SERVICE
SINCE 1988
23846 SUNNYMEAD BLVD.
SUITE #6
MORENO VALLEY, CA 92553
B: (951) 243-7614
F: (951) 243-7673

GLASS FACTORY
26383 BASE LINE
HIGHLAND, CA 92346

JOB NAME: INLAND REGIONAL CENTER BTS

ARCHITECT: WARE MALCOMB

SHEET DESCRIPTION: 3rd FLOOR PLAN - BLDG. 1

DATE: 10-30-08

SCALE: 3/32"=1'-0"

DRAWN: MAC/BMR

JOB NO: 068-08

SHEET NO: 2.05

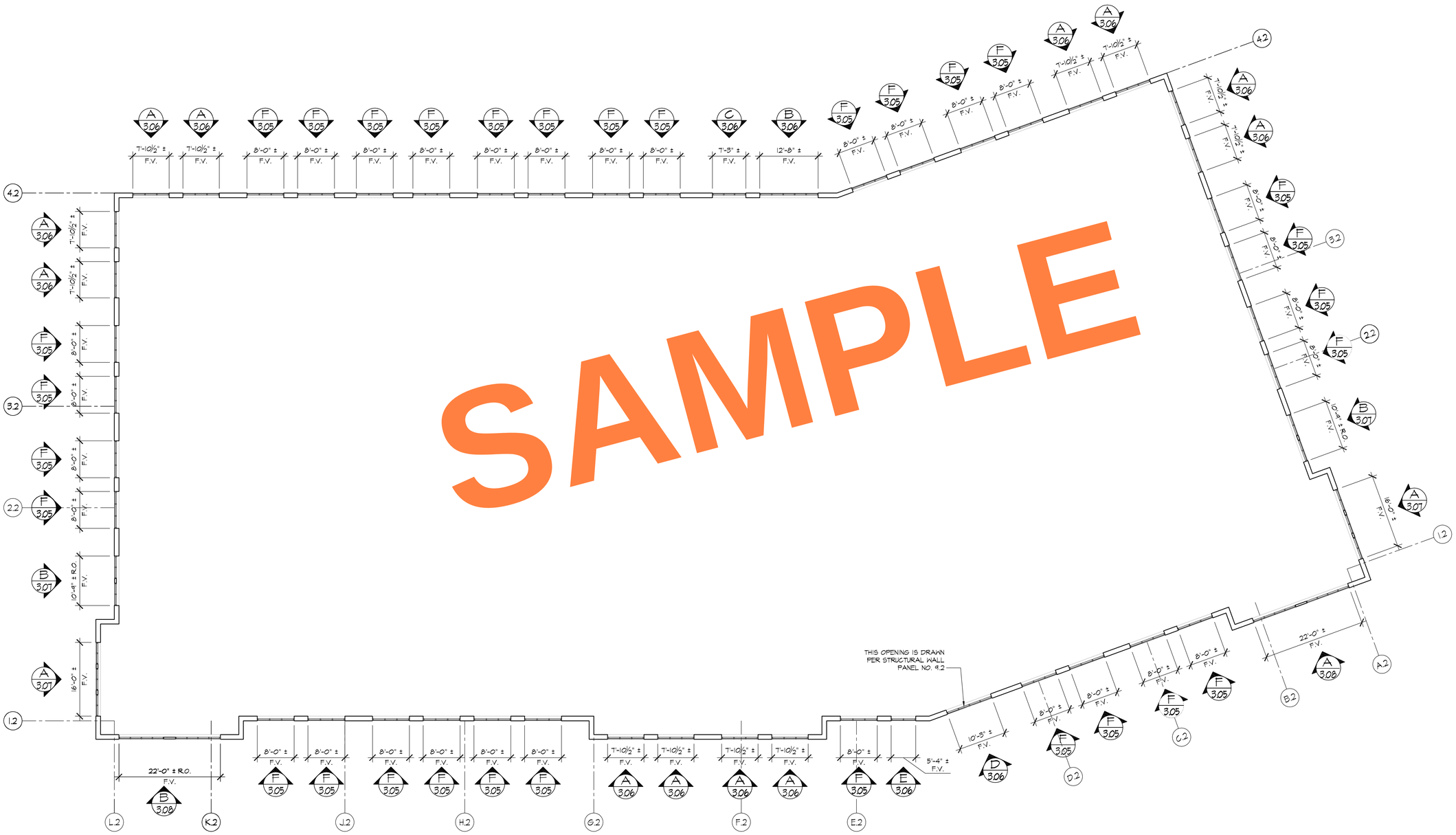

PARTIAL 3RD. FLOOR PLAN

REF. ARCH'L - A2.3b

BUILDING - 2

N

REVISIONS	BY
△	
△	
△	
△	
△	

BMR
DRAFTING SERVICE
SINCE 1988
23846 SUNNYMEAD BLVD.
SUITE #6
MORENO VALLEY, CA 92553
B: (951) 243-7614
F: (951) 243-7673

GLASS FACTORY
26383 BASE LINE
HIGHLAND, CA 92346

JOB NAME: INLAND REGIONAL CENTER BTS

ARCHITECT: WARE MALCOMB

SHEET DESCRIPTION: 3rd FLOOR PLAN - BLDG. 2

DATE: 10-30-08

SCALE: 3/32"=1'-0"

DRAWN: MAC/BMR

JOB NO: 068-08

SHEET NO: 2.06

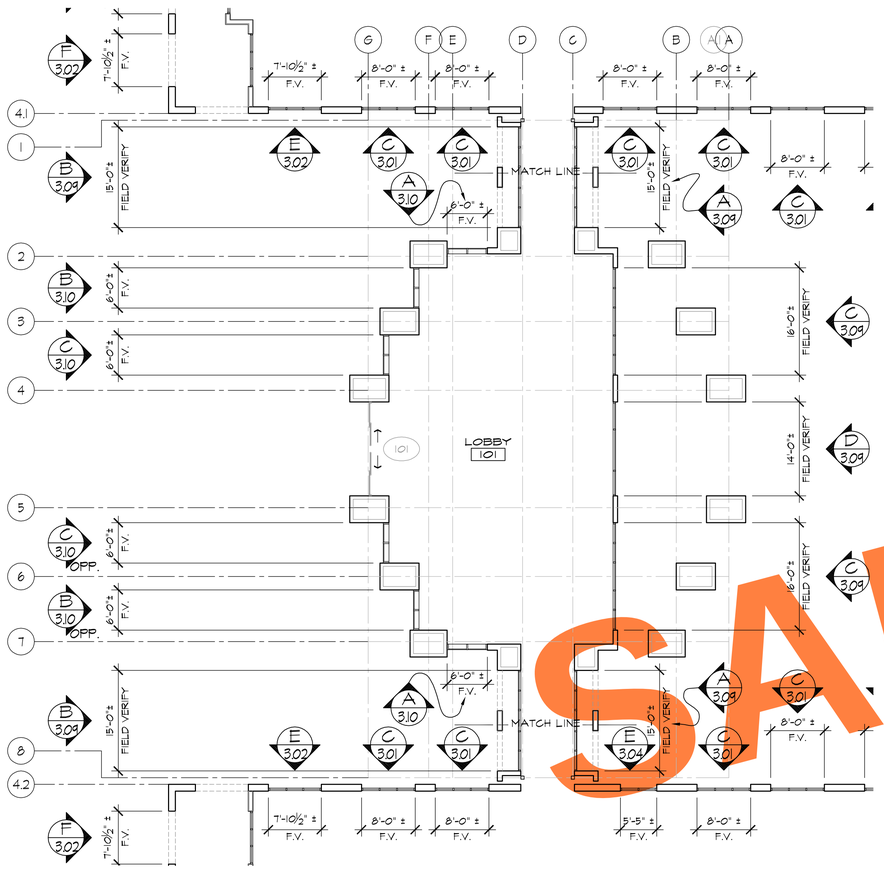

PARTIAL 1ST. FLOOR PLAN

REF. ARCH'L - A2.1a

LOBBY N

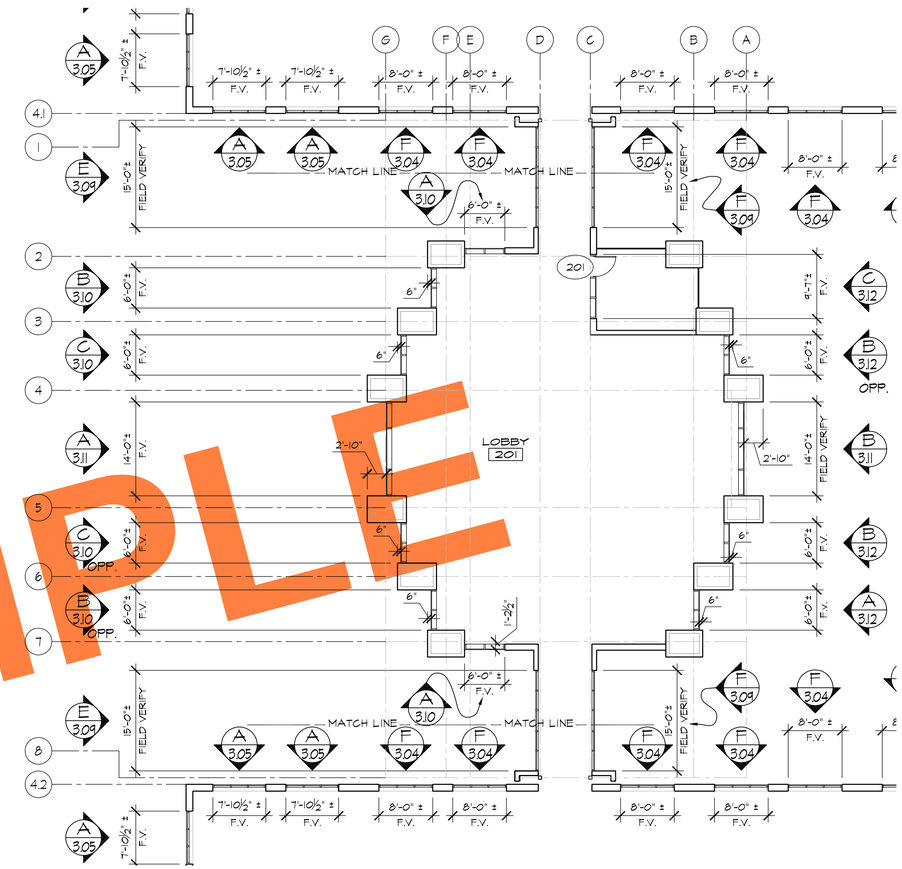

PARTIAL 2ND. FLOOR PLAN

REF. ARCH'L - A2.1a

LOBBY N

SAMPLE

REVISIONS	BY
△	
△	
△	
△	
△	

BMR
DRAFTING SERVICE
SINCE 1988
23846 SUNNYMEAD BLVD.
SUITE #6
MORENO VALLEY, CA 92553
B: (951) 243-7614
F: (951) 243-7673

GLASS FACTORY
26383 BASE LINE
HIGHLAND, CA 92346

JOB NAME: INLAND REGIONAL CENTER BTS

ARCHITECT: WARE MALCOMB

SHEET DESCRIPTION: 1st & 2nd FLR. PLAN - BLDG. 3

DATE: 10-30-08

SCALE: 3/32"=1'-0"

DRAWN: MAC/BMR

JOB NO: 068-08

SHEET NO: 2.07

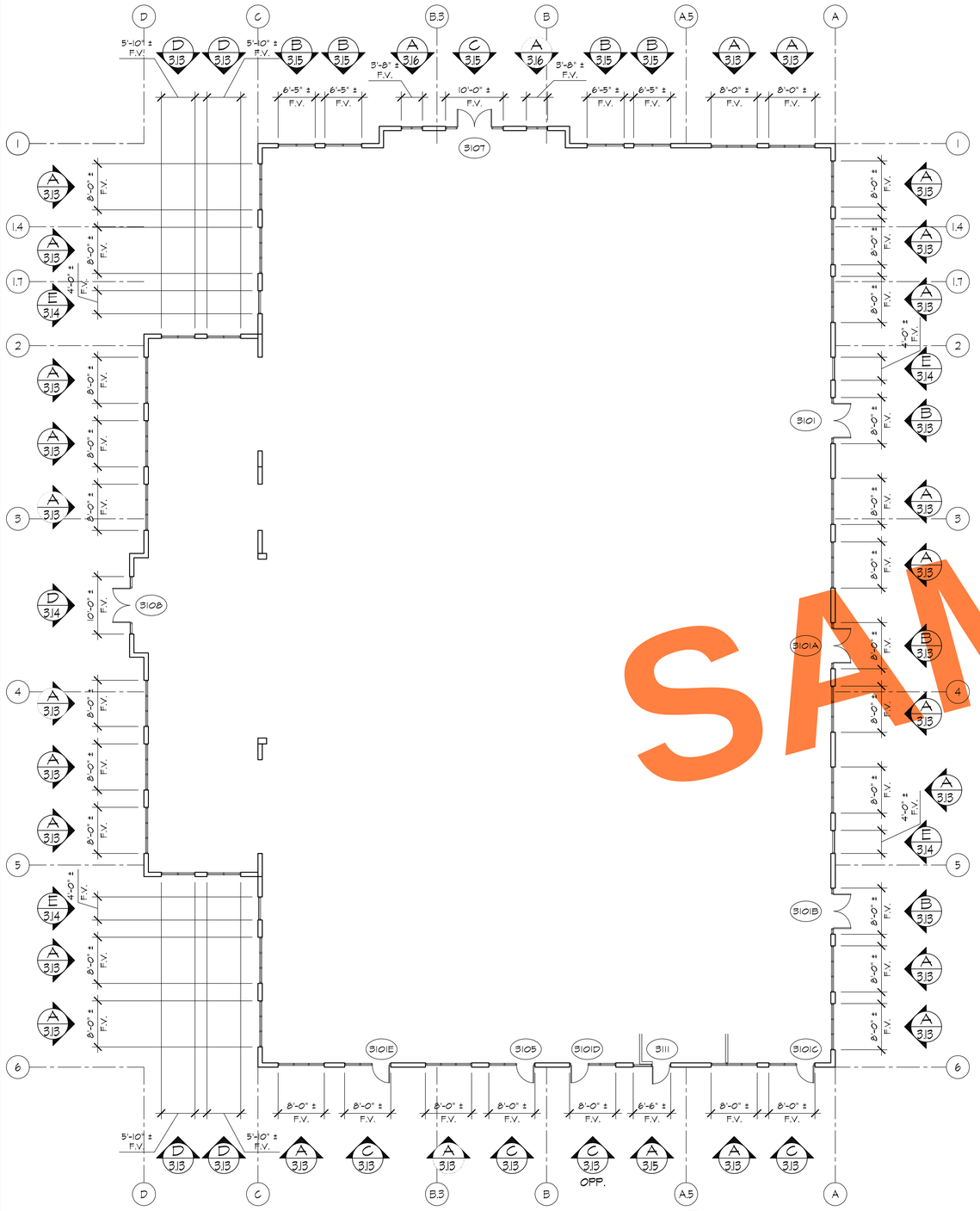

PARTIAL 1ST. FLOOR PLAN

REF. ARCH'L - A2.4 BUILDING - 3 N

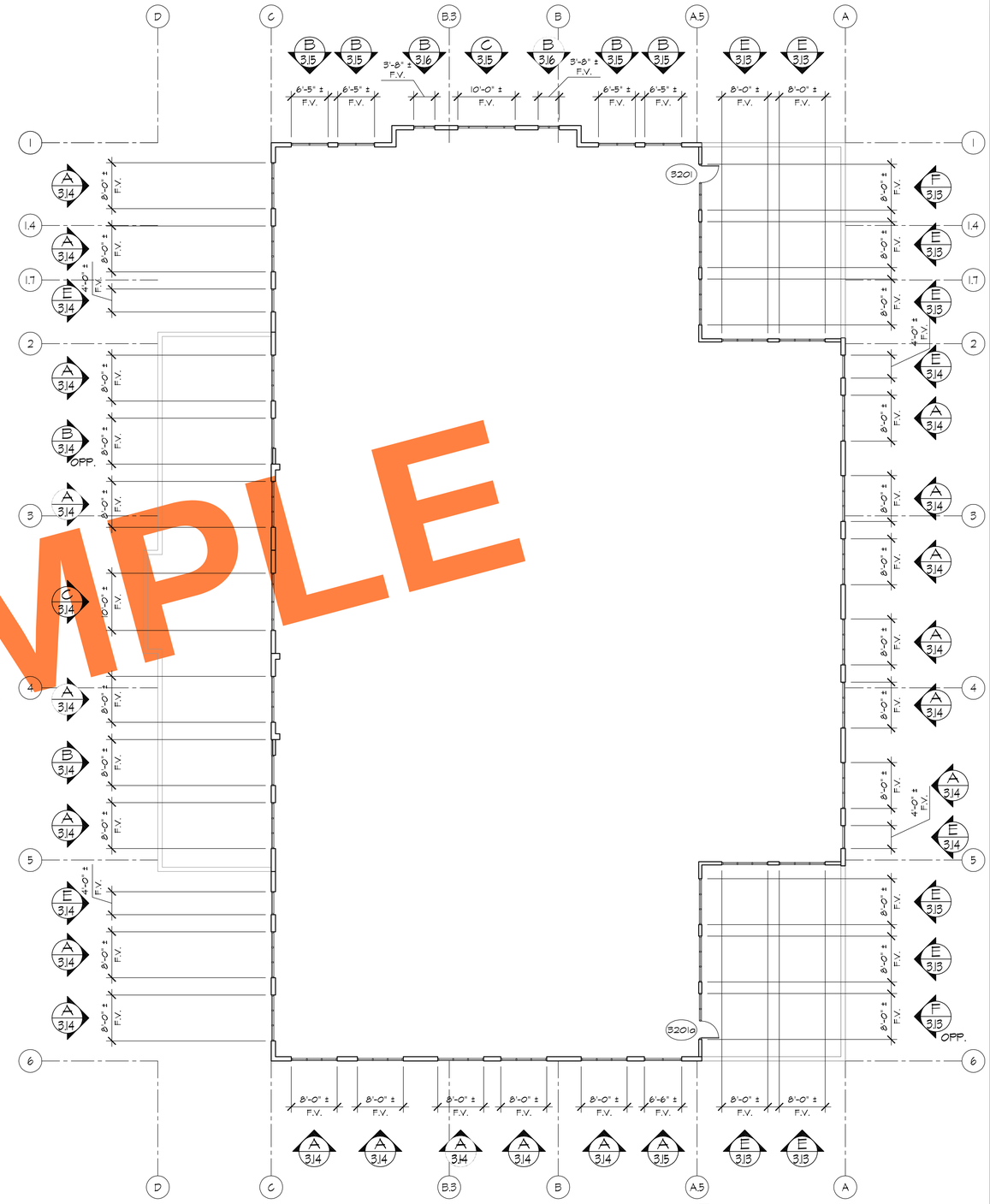

PARTIAL 2ND. FLOOR PLAN

REF. ARCH'L - A2.5 BUILDING - 3 N

SAMPLE

REVISIONS	BY
△	
△	
△	
△	
△	

BMR
DRAFTING SERVICE
SINCE 1988
23846 SUNNYMEAD BLVD.
SUITE #6
MORENO VALLEY, CA 92553
B: (951) 243-7614
F: (951) 243-7673

GLASS FACTORY
26383 BASE LINE
HIGHLAND, CA 92346

JOB NAME: INLAND REGIONAL CENTER BTS

ARCHITECT: WARE MALCOMB

SHEET DESCRIPTION: 1st & 2nd FLR. PLAN - BLDG. 3

DATE: 10-30-08

SCALE: 3/32"=1'-0"

DRAWN: MAC/BMR

JOB NO: 068-08

SHEET NO: 2.08

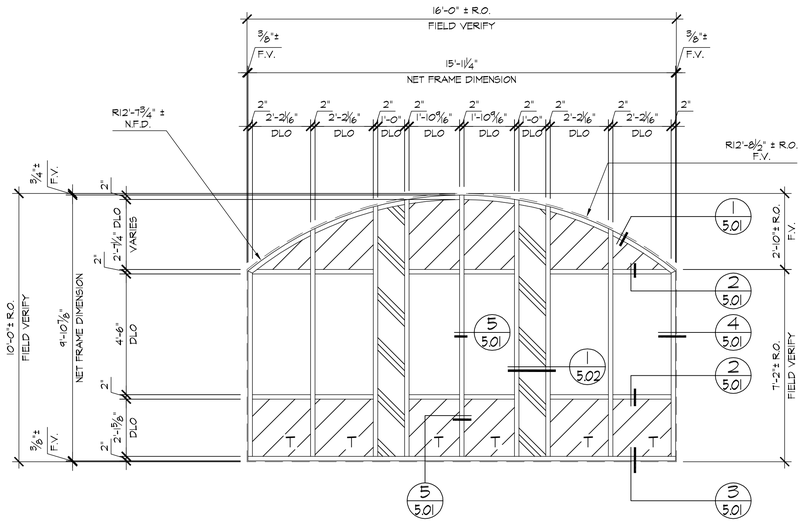

A 3.01 ELEVATION (AG451)

LOCATION

BLDG-1/1st. FLR. ~ 1 REQ'D (EAST)
BLDG-2/1st. FLR. ~ 1 REQ'D (EAST)

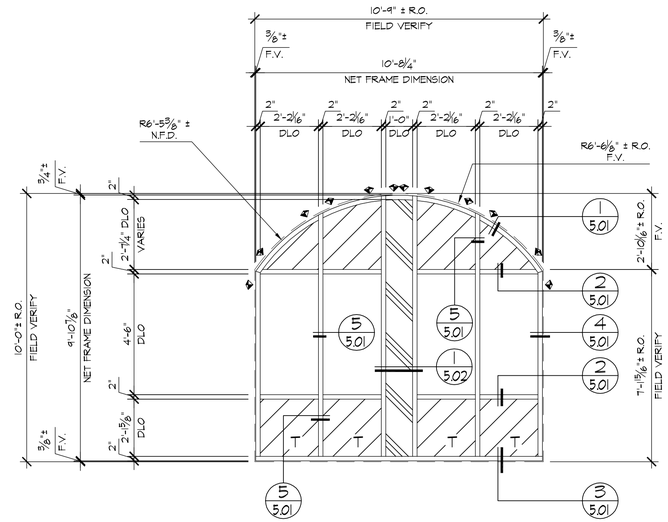

B 3.01 ELEVATION (AG451)

LOCATION

BLDG-1/1st. FLR. ~ 1 REQ'D (EAST)

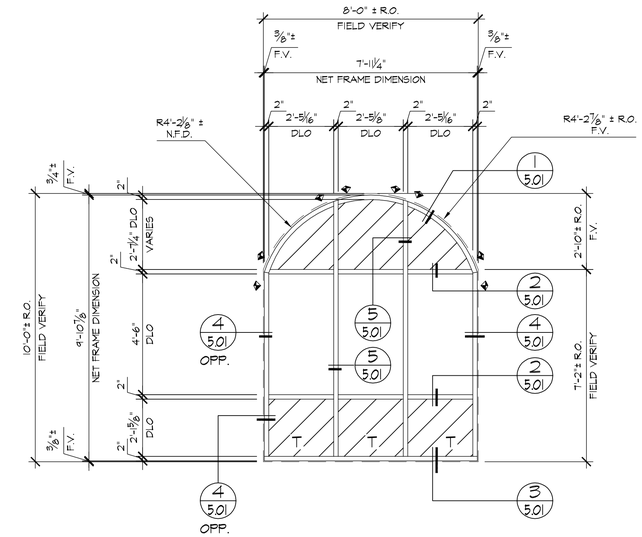

C 3.01 ELEVATION (AG451)

LOCATION

BLDG-1/1st. FLR. ~ 2 REQ'D (EAST)
BLDG-1/1st. FLR. ~ 9 REQ'D (SOUTH)
BLDG-1/1st. FLR. ~ 10 REQ'D (NORTH)
BLDG-2/1st. FLR. ~ 4 REQ'D (EAST)
BLDG-2/1st. FLR. ~ 8 REQ'D (NORTH)
BLDG-2/1st. FLR. ~ 10 REQ'D (SOUTH)

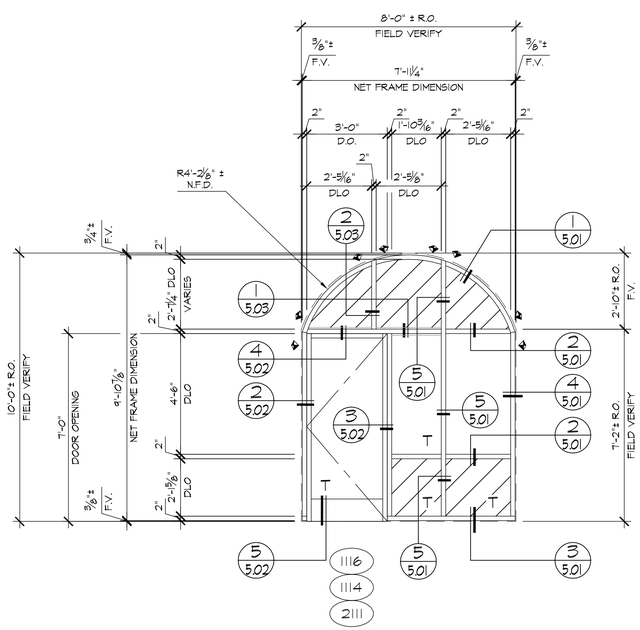

D 3.01 ELEVATION (AG451)

LOCATION

BLDG-1/1st. FLR. ~ 1 REQ'D (EAST)
BLDG-1/1st. FLR. ~ 1 REQ'D/OPP. (NORTH)
BLDG-2/1st. FLR. ~ 1 REQ'D/OPP. (NORTH)

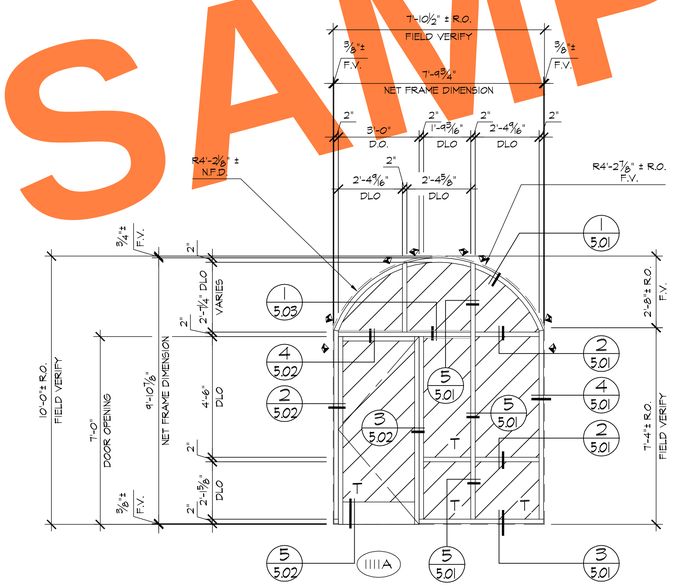

E 3.01 ELEVATION (AG451)

LOCATION

BLDG-1/1st. FLR. ~ 1 REQ'D (EAST)

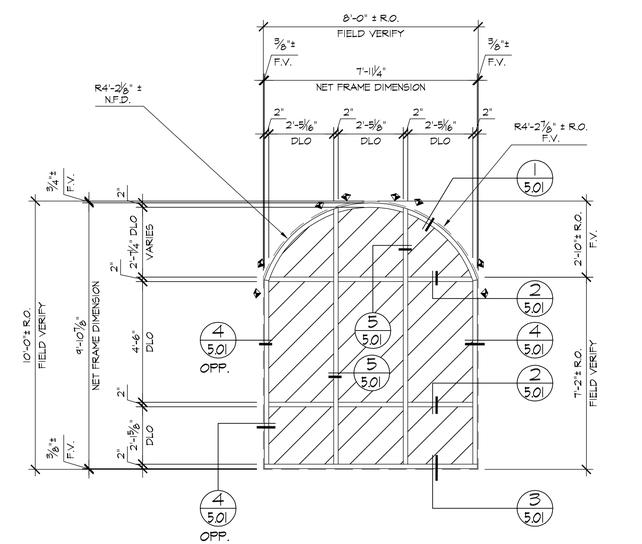

F 3.01 ELEVATION (AG451)

LOCATION

BLDG-1/1st. FLR. ~ 1 REQ'D (EAST)
BLDG-1/1st. FLR. ~ 1 REQ'D (SOUTH)

SAMPLE

REVISIONS	BY
△	
△	
△	
△	
△	

BMR
DRAFTING SERVICE
SINCE 1988
23846 SUNNYMEAD BLVD.
SUITE #6
MORENO VALLEY, CA 92553
B: (951) 243-7614
F: (951) 243-7673

GLASS FACTORY
26383 BASE LINE
HIGHLAND, CA 92346

JOB NAME: INLAND REGIONAL CENTER BTS
ARCHITECT: WARE MALCOMB
SHEET DESCRIPTION: ELEVATIONS

DATE: 10-30-08
SCALE: 3/8"=1'-0"
DRAWN: MAC/BMR
JOB NO: 068-08
SHEET NO: 3.01

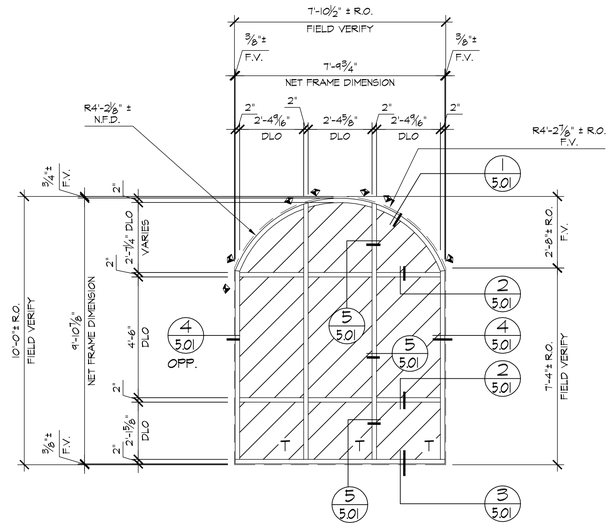

A 3.02 ELEVATION (AG451)

LOCATION

BLDG-1/1st. FLR. ~ 2 REQ'D (SOUTH)

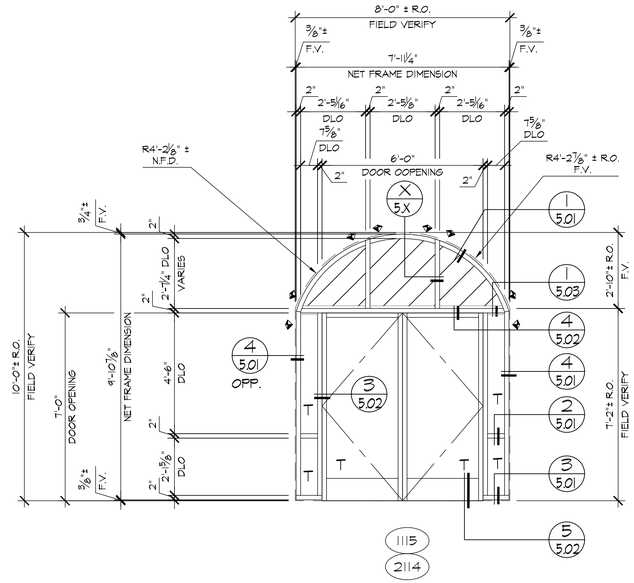

B 3.02 ELEVATION

LOCATION

BLDG-1/1st. FLR. ~ 1 REQ'D (SOUTH)

BLDG-2/1st. FLR. ~ 1 REQ'D (SOUTH)

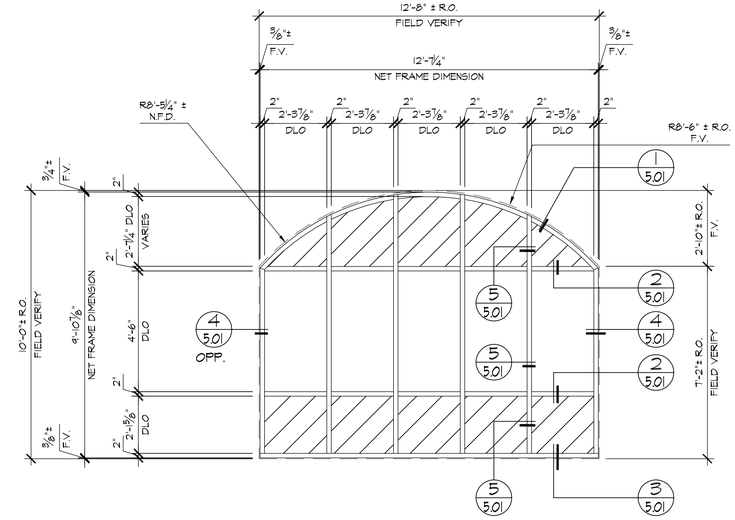

C 3.02 ELEVATION

LOCATION

BLDG-1/1st. FLR. ~ 1 REQ'D (SOUTH)

BLDG-2/1st. FLR. ~ 1 REQ'D (NORTH)

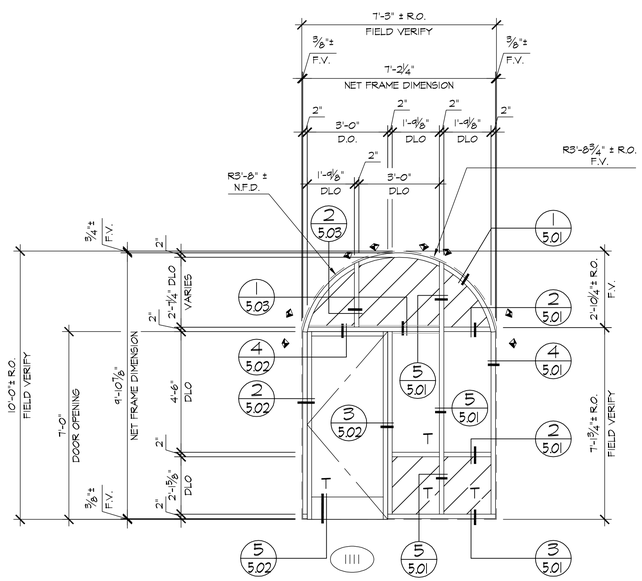

D 3.02 ELEVATION (AG451)

LOCATION

BLDG-1/1st. FLR. ~ 1 REQ'D (SOUTH)

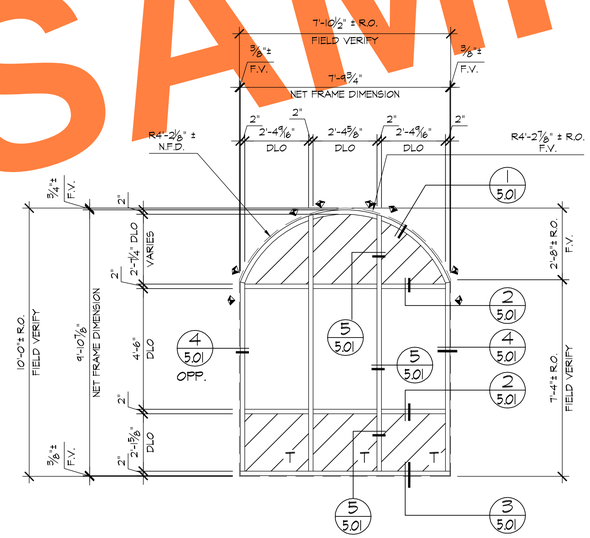

E 3.02 ELEVATION (AG451)

LOCATION

BLDG-1/1st. FLR. ~ 1 REQ'D (SOUTH)

BLDG-1/1st. FLR. ~ 4 REQ'D (NORTH)

BLDG-2/1st. FLR. ~ 2 REQ'D (EAST)

BLDG-2/1st. FLR. ~ 3 REQ'D (NORTH)

BLDG-2/1st. FLR. ~ 4 REQ'D (SOUTH)

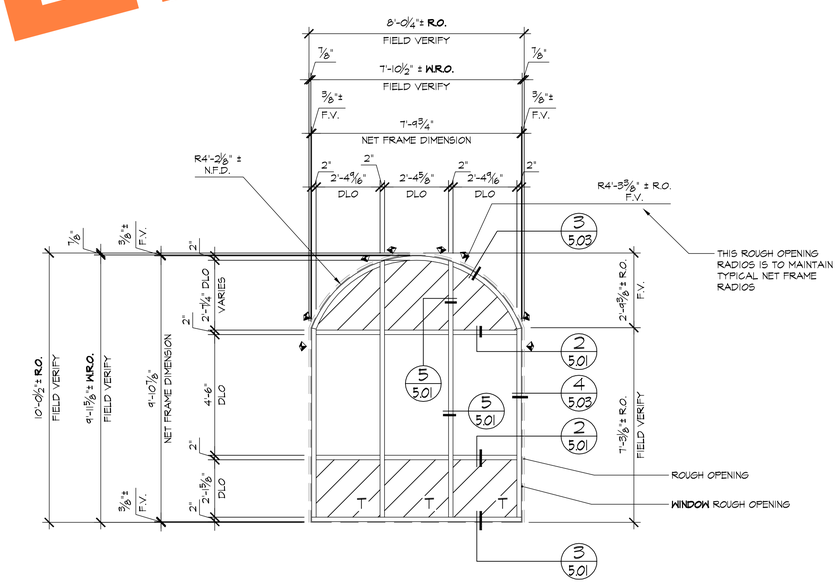

F 3.02 ELEVATION (AG451)

LOCATION

BLDG-1/1st. FLR. ~ 2 REQ'D (WEST)

BLDG-2/1st. FLR. ~ 2 REQ'D (WEST)

SAMPLE

REVISIONS	BY
△	
△	
△	
△	
△	

BMR
DRAFTING SERVICE
SINCE 1988
23846 SUNNYMEAD BLVD.
SUITE #6
MORENO VALLEY, CA 92553
B: (951) 243-7614
F: (951) 243-7673

GLASS FACTORY
26383 BASE LINE
HIGHLAND, CA 92346

JOB NAME: INLAND REGIONAL CENTER BTS

ARCHITECT: WARE MALCOMB

SHEET DESCRIPTION: ELEVATIONS

DATE: 10-30-08

SCALE: 3/8"=1'-0"

DRAWN: MAC/BMR

JOB NO: 068-08

SHEET NO: 3.02

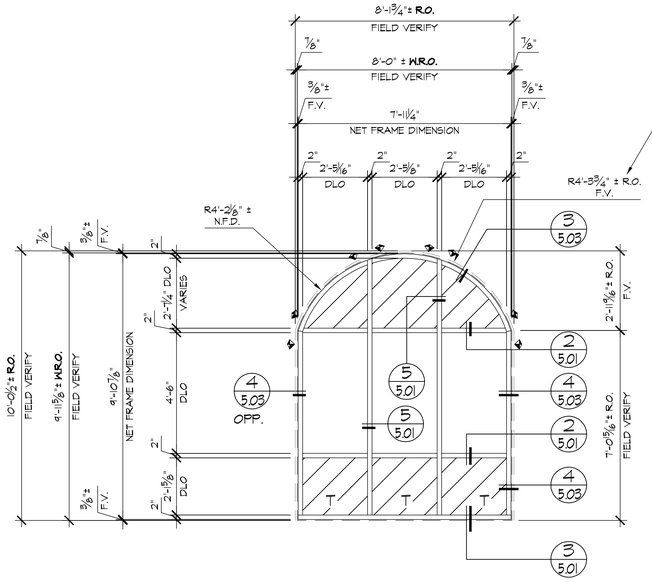

A 3.03 ELEVATION (AG451)

LOCATION

BLDG-1/1st. FLR. ~ 4 REQ'D (WEST)

BLDG-2/1st. FLR. ~ 4 REQ'D (WEST)

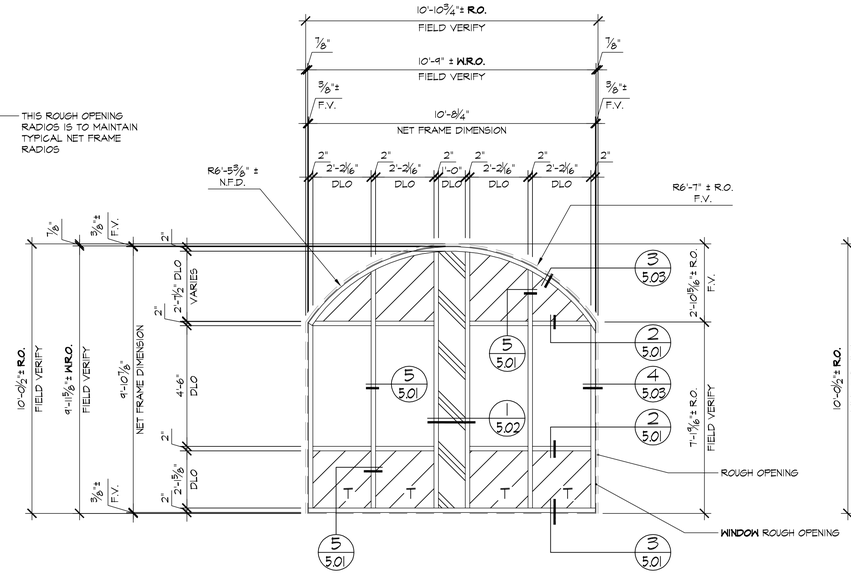

B 3.03 ELEVATION (AG451)

LOCATION

BLDG-1/1st. FLR. ~ 1 REQ'D (WEST)

BLDG-2/1st. FLR. ~ 1 REQ'D (WEST)

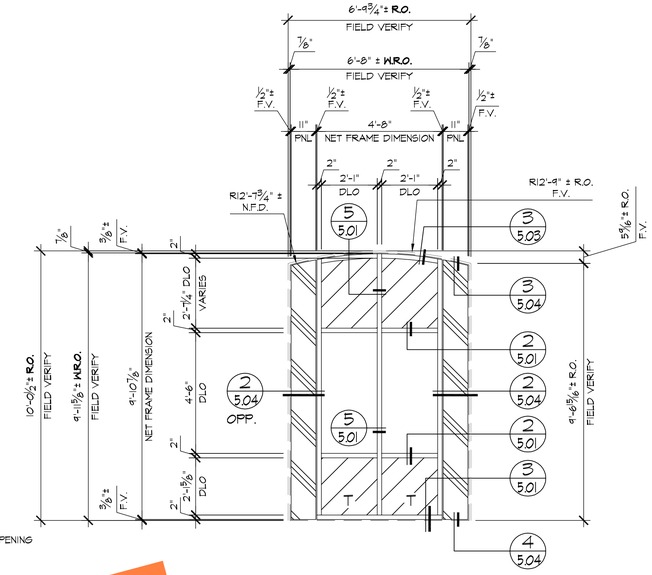

C 3.03 ELEVATION (AG451)

LOCATION

BLDG-1/1st. FLR. ~ 1 REQ'D (WEST)

BLDG-2/1st. FLR. ~ 1 REQ'D (WEST)

SAMPLE

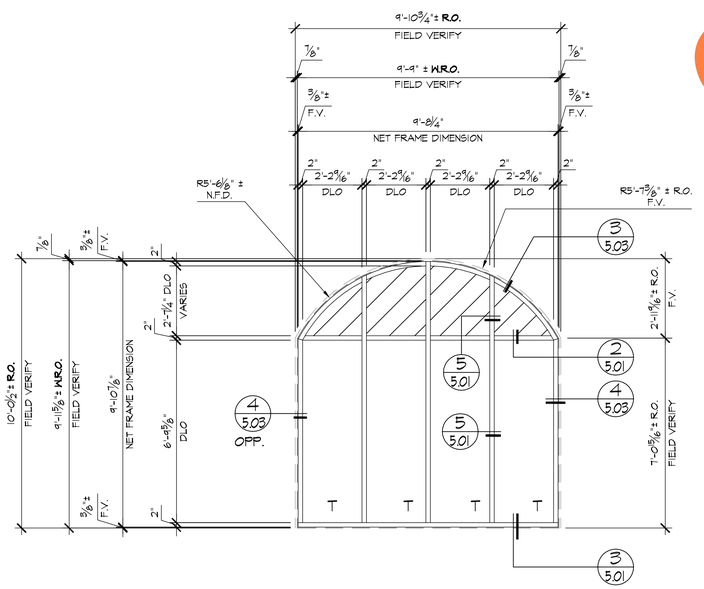

D 3.03 ELEVATION (AG451)

LOCATION

BLDG-1/1st. FLR. ~ 1 REQ'D (NORTH)

BLDG-2/1st. FLR. ~ 1 REQ'D (SOUTH)

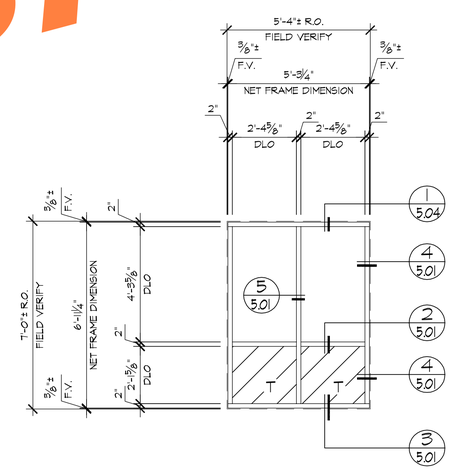

E 3.03 ELEVATION (AG451)

LOCATION

BLDG-1/1st. FLR. ~ 1 REQ'D (NORTH)

BLDG-2/1st. FLR. ~ 1 REQ'D (SOUTH)

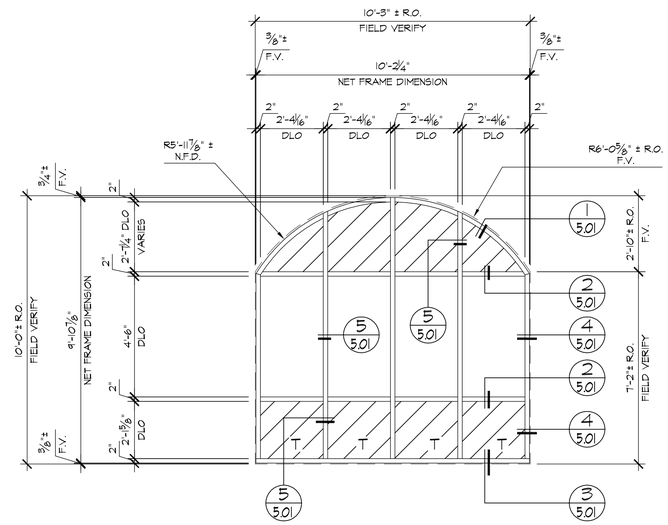

F 3.03 ELEVATION (AG451)

LOCATION

BLDG-1/1st. FLR. ~ 1 REQ'D (NORTH)

BLDG-2/1st. FLR. ~ 1 REQ'D (SOUTH)

REVISIONS	BY
△	
△	
△	
△	
△	

BMR
DRAFTING SERVICE
SINCE 1988
23846 SUNNYMEAD BLVD.
SUITE #6
MORENO VALLEY, CA 92553
B: (951) 243-7614
F: (951) 243-7673

GLASS FACTORY
26383 BASE LINE
HIGHLAND, CA 92346

JOB NAME: INLAND REGIONAL CENTER BTS

ARCHITECT: WARE MALCOMB

SHEET DESCRIPTION: ELEVATIONS

DATE: 10-30-08

SCALE: 3/8"=1'-0"

DRAWN: MAC/BMR

JOB NO: 068-08

SHEET NO: 3.03

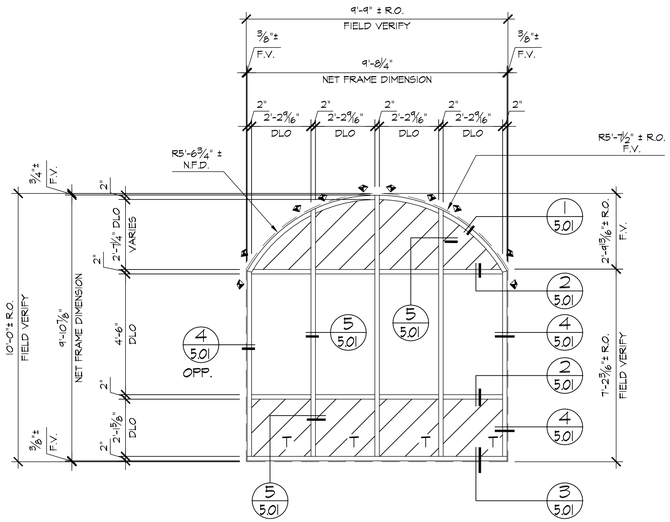

A 3.04 ELEVATION (AG451)
LOCATION
BLDG-1/1st. FLR. ~ 2 REQ'D (NORTH)
BLDG-2/1st. FLR. ~ 2 REQ'D (SOUTH)

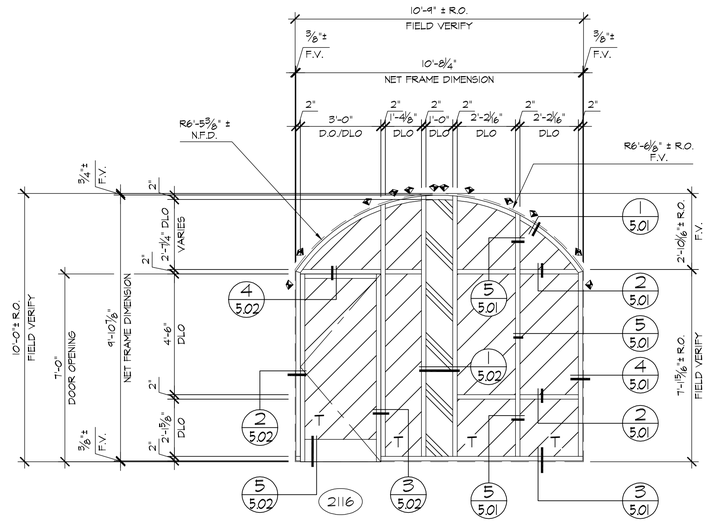

B 3.04 ELEVATION (AG451)
LOCATION
BLDG-2/1st. FLR. ~ 1 REQ'D (EAST)

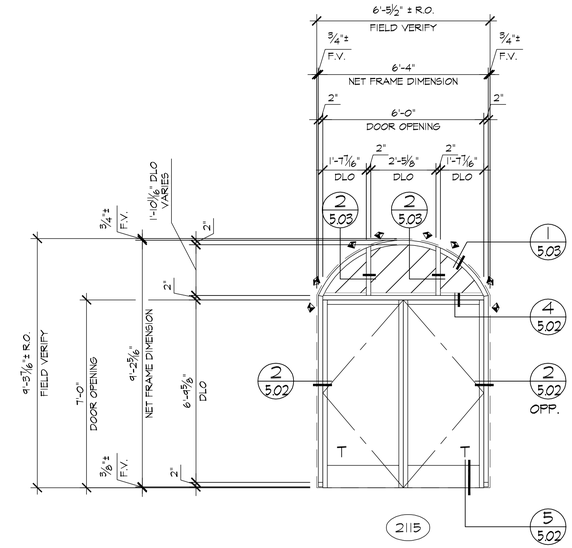

C 3.04 ELEVATION (AG451)
LOCATION
BLDG-2/1st. FLR. ~ 1 REQ'D (NORTH)

SAMPLE

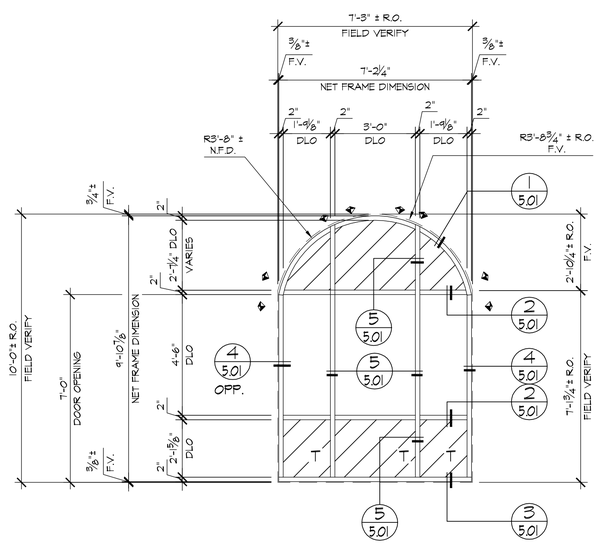

D 3.04 ELEVATION (AG451)
LOCATION
BLDG-2/1st. FLR. ~ 1 REQ'D (NORTH)

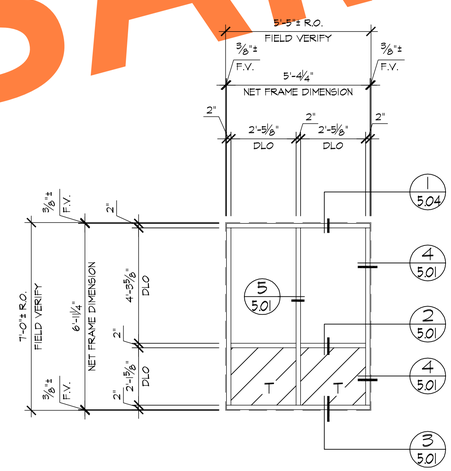

E 3.04 ELEVATION (AG451)
LOCATION
BLDG-2/1st. FLR. ~ 1 REQ'D (NORTH)

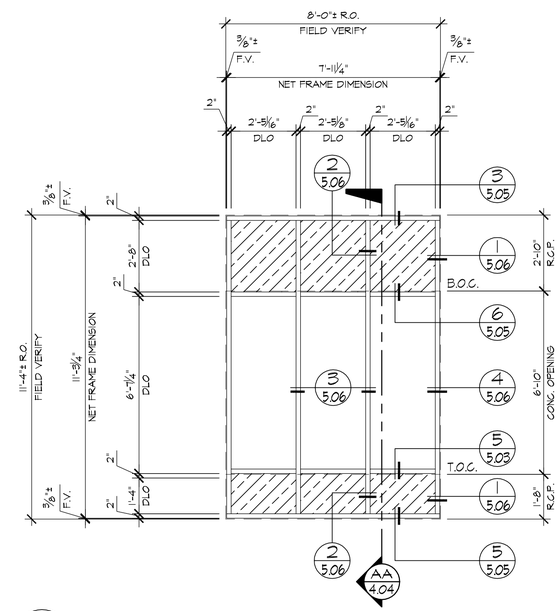

F 3.04 ELEVATION (AFG451 & AFI75)
LOCATION

BLDG-1/2nd. FLR. ~ 4 REQ'D (EAST)	BLDG-2/2nd. FLR. ~ 4 REQ'D (EAST)
BLDG-1/2nd. FLR. ~ 11 REQ'D (SOUTH)	BLDG-2/2nd. FLR. ~ 11 REQ'D (SOUTH)
BLDG-1/2nd. FLR. ~ 4 REQ'D (WEST)	BLDG-2/2nd. FLR. ~ 4 REQ'D (WEST)
BLDG-1/2nd. FLR. ~ 11 REQ'D (NORTH)	BLDG-2/2nd. FLR. ~ 11 REQ'D (NORTH)

REVISIONS	BY
△	
△	
△	
△	
△	

BMR
DRAFTING SERVICE
SINCE 1988
23846 SUNNYMEAD BLVD.
SUITE #6
MORENO VALLEY, CA 92553
B: (951) 243-7614
F: (951) 243-7673

GLASS FACTORY
26383 BASE LINE
HIGHLAND, CA 92346

JOB NAME: INLAND REGIONAL CENTER BTS
ARCHITECT: WARE MALCOMB
SHEET DESCRIPTION: ELEVATIONS

DATE: 10-30-08
SCALE: 3/8"=1'-0"
DRAWN: MAC/BMR
JOB NO: 068-08
SHEET NO: 3.04

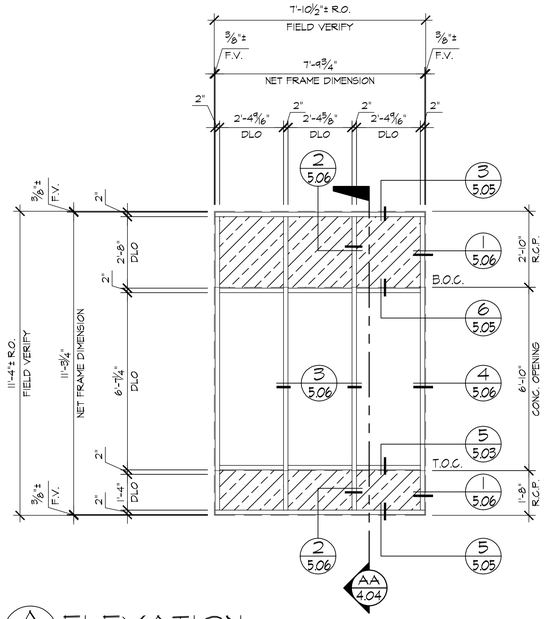

A 3.05 ELEVATION (AFG451 & AF1175)

LOCATION

BLDG-1/2nd. FLR. ~ 2 REQ'D (EAST)
BLDG-1/2nd. FLR. ~ 4 REQ'D (SOUTH)
BLDG-1/2nd. FLR. ~ 2 REQ'D (WEST)
BLDG-1/2nd. FLR. ~ 4 REQ'D (NORTH)

BLDG-2/2nd. FLR. ~ 2 REQ'D (EAST)
BLDG-2/2nd. FLR. ~ 4 REQ'D (SOUTH)
BLDG-2/2nd. FLR. ~ 2 REQ'D (WEST)
BLDG-2/2nd. FLR. ~ 4 REQ'D (NORTH)

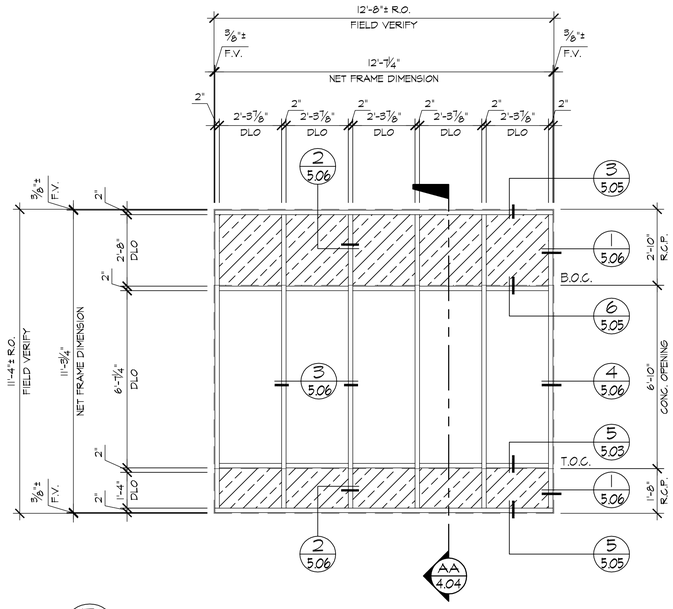

B 3.05 ELEVATION (AFG451 & AF1175)

LOCATION

BLDG-1/2nd. FLR. ~ 1 REQ'D (SOUTH)
BLDG-2/2nd. FLR. ~ 1 REQ'D (NORTH)

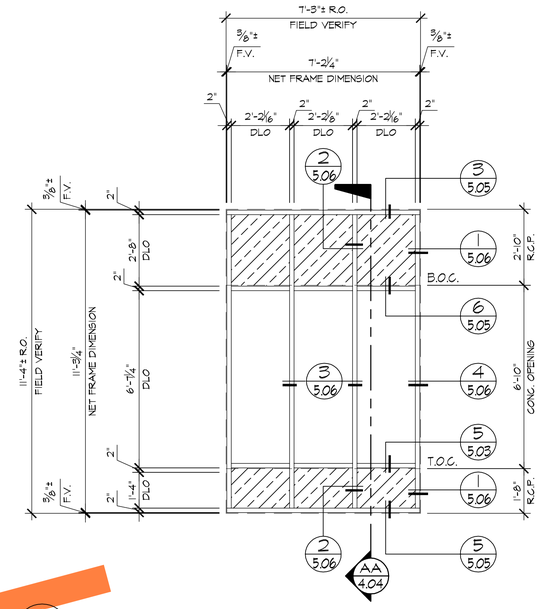

C 3.05 ELEVATION (AFG451 & AF1175)

LOCATION

BLDG-1/2nd. FLR. ~ 1 REQ'D (SOUTH)
BLDG-2/2nd. FLR. ~ 1 REQ'D (NORTH)

SAMPLE

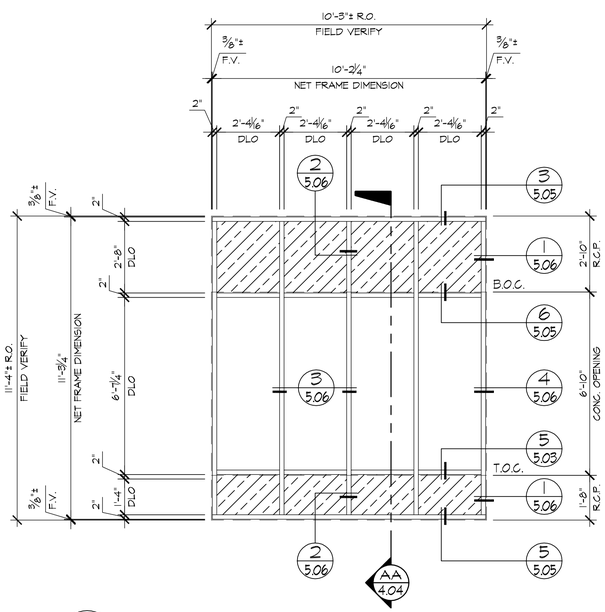

D 3.05 ELEVATION (AFG451 & AF1175)

LOCATION

BLDG-1/2nd. FLR. ~ 1 REQ'D (NORTH)
BLDG-2/2nd. FLR. ~ 1 REQ'D (SOUTH)

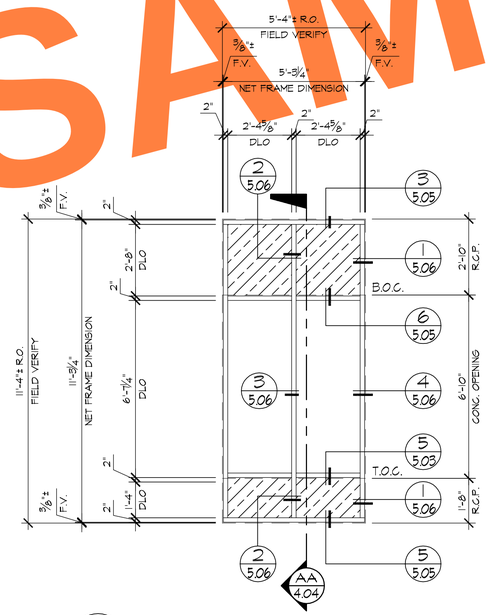

E 3.05 ELEVATION (AFG451 & AF1175)

LOCATION

BLDG-1/2nd. FLR. ~ 1 REQ'D (NORTH)
BLDG-2/2nd. FLR. ~ 1 REQ'D (SOUTH)

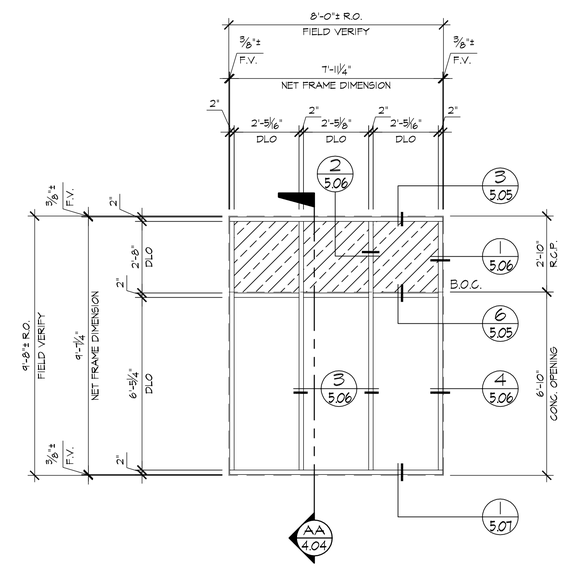

F 3.05 ELEVATION (AFG451 & AF1175)

LOCATION

BLDG-1/3rd. FLR. ~ 4 REQ'D (EAST)
BLDG-1/3rd FLR. ~ 12 REQ'D (SOUTH)
BLDG-1/3rd FLR. ~ 4 REQ'D (WEST)
BLDG-1/3rd FLR. ~ 11 REQ'D (NORTH)

BLDG-2/3rd FLR. ~ 4 REQ'D (EAST)
BLDG-2/3rd FLR. ~ 11 REQ'D (SOUTH)
BLDG-2/3rd FLR. ~ 4 REQ'D (WEST)
BLDG-2/3rd FLR. ~ 12 REQ'D (NORTH)

REVISIONS	BY
△	
△	
△	
△	
△	

BMR
DRAFTING SERVICE
SINCE 1988
23846 SUNNYMEAD BLVD.
SUITE #6
MORENO VALLEY, CA 92553
B: (951) 243-7614
F: (951) 243-7673

GLASS FACTORY
26383 BASE LINE
HIGHLAND, CA 92346

JOB NAME: INLAND REGIONAL CENTER BTS
ARCHITECT: WARE MALCOMB
SHEET DESCRIPTION: ELEVATIONS

DATE: 10-30-08
SCALE: 3/8"=1'-0"
DRAWN: MAC/BMR
JOB NO: 068-08
SHEET NO: 3.05

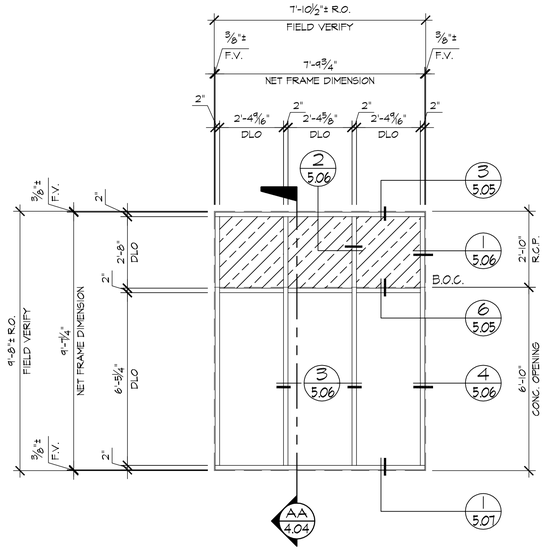

A 3.06 ELEVATION (AFG451 & AF1175)

LOCATION

BLDG-1/3rd. FLR. ~ 2 REQ'D (EAST)
BLDG-1/3rd. FLR. ~ 4 REQ'D (SOUTH)
BLDG-1/3rd. FLR. ~ 2 REQ'D (WEST)
BLDG-1/3rd. FLR. ~ 4 REQ'D (NORTH)
BLDG-2/3rd. FLR. ~ 2 REQ'D (EAST)
BLDG-2/3rd. FLR. ~ 4 REQ'D (SOUTH)
BLDG-2/3rd. FLR. ~ 2 REQ'D (WEST)
BLDG-2/3rd. FLR. ~ 4 REQ'D (NORTH)

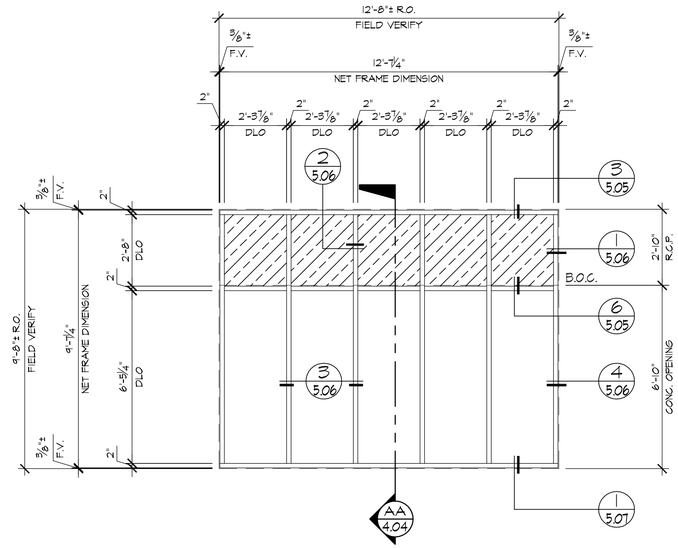

B 3.06 ELEVATION (AFG451 & AF1175)

LOCATION

BLDG-1/3rd. FLR. ~ 1 REQ'D (SOUTH)
BLDG-2/3rd. FLR. ~ 1 REQ'D (NORTH)

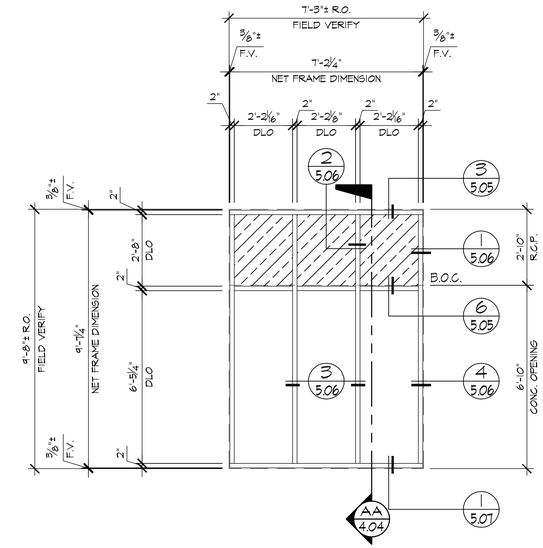

C 3.06 ELEVATION (AFG451 & AF1175)

LOCATION

BLDG-1/3rd. FLR. ~ 1 REQ'D (SOUTH)
BLDG-2/3rd. FLR. ~ 1 REQ'D (NORTH)

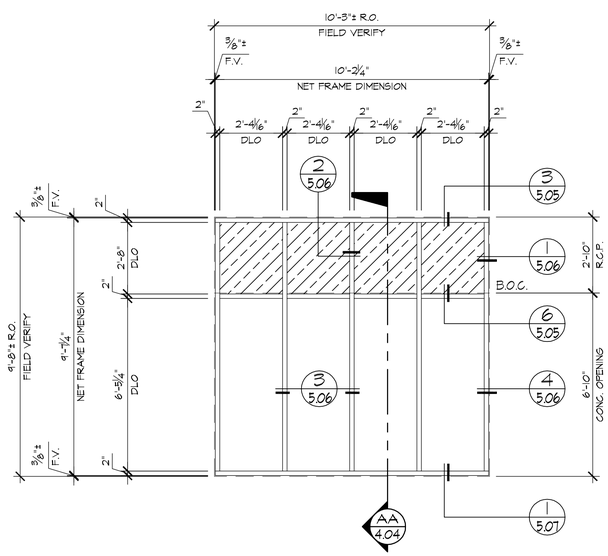

D 3.06 ELEVATION (AFG451 & AF1175)

LOCATION

BLDG-1/3rd. FLR. ~ 1 REQ'D (NORTH)
BLDG-2/3rd. FLR. ~ 1 REQ'D (SOUTH)

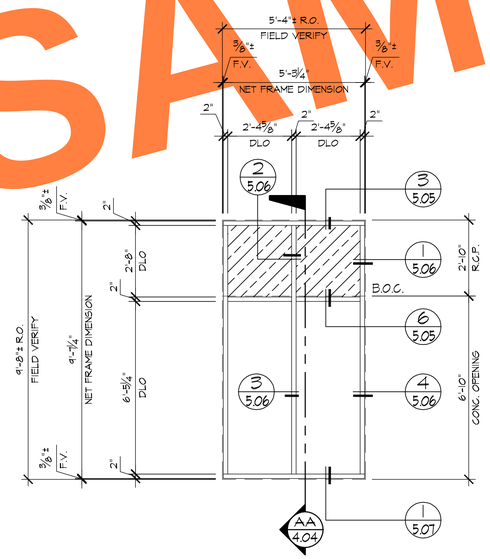

E 3.06 ELEVATION (AFG451 & AF1175)

LOCATION

BLDG-1/3rd. FLR. ~ 1 REQ'D (NORTH)
BLDG-2/3rd. FLR. ~ 1 REQ'D (SOUTH)

SAMPLE

REVISIONS	BY
△	
△	
△	
△	
△	

BMR
DRAFTING SERVICE
SINCE 1988
23846 SUNNYMEAD BLVD.
SUITE #6
MORENO VALLEY, CA 92553
B: (951) 243-7614
F: (951) 243-7673

GLASS FACTORY
26383 BASE LINE
HIGHLAND, CA 92346

JOB NAME: INLAND REGIONAL CENTER BTS
ARCHITECT: WARE MALCOMB
SHEET DESCRIPTION: ELEVATIONS

DATE: 10-30-08
SCALE: 3/8"=1'-0"
DRAWN: MAC/BMR
JOB NO: 068-08
SHEET NO: 3.06

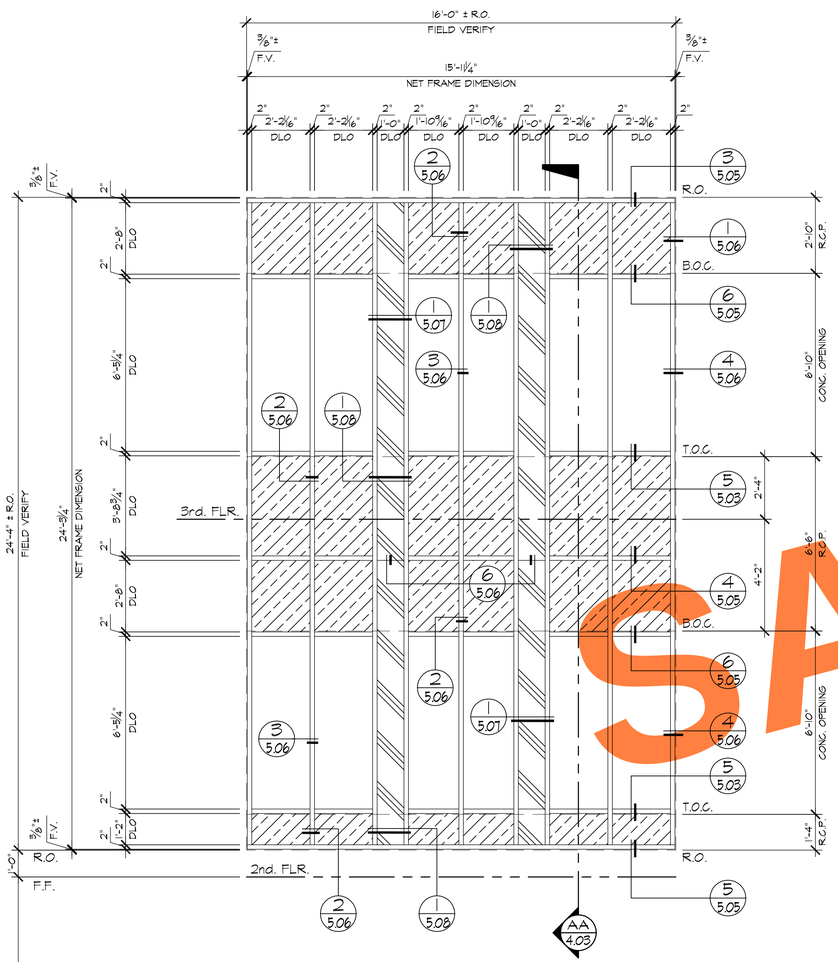

A 3.07 ELEVATION (AFG451 & AF175)

LOCATION

BLDG-1/2nd.-3rd. FLR. ~ 1 REQ'D (EAST) | BLDG-2/2nd.-3rd. FLR. ~ 1 REQ'D (EAST)
BLDG-1/2nd.-3rd. FLR. ~ 1 REQ'D (WEST) | BLDG-2/2nd.-3rd. FLR. ~ 1 REQ'D (WEST)

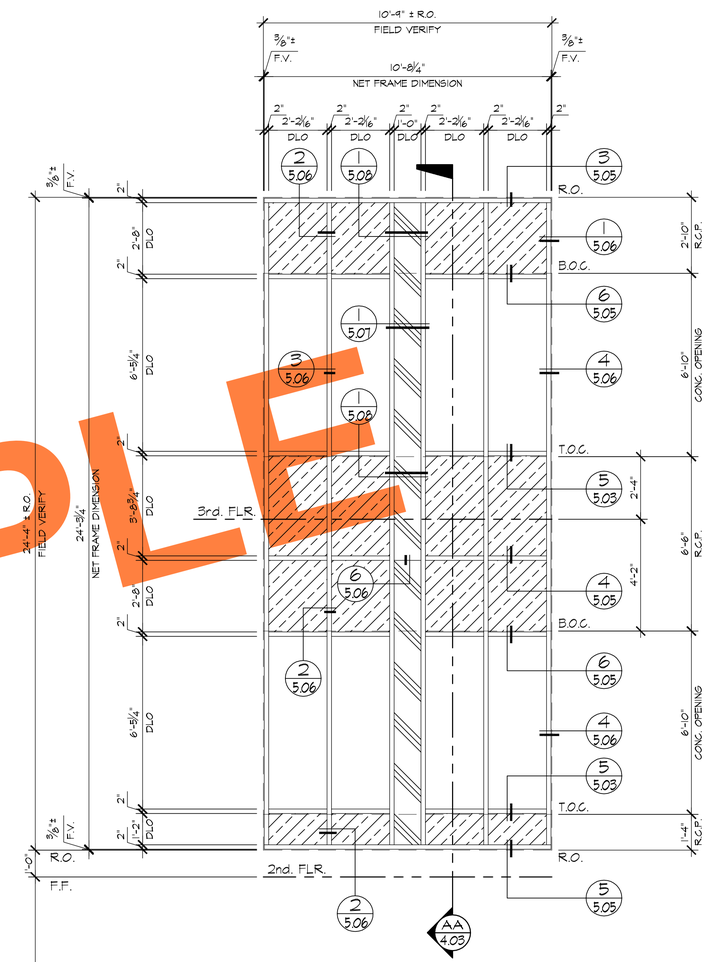

B 3.07 ELEVATION (AFG451 & AF175)

LOCATION

BLDG-1/2nd.-3rd. FLR. ~ 1 REQ'D (EAST) | BLDG-2/2nd.-3rd. FLR. ~ 1 REQ'D (EAST)
BLDG-1/2nd.-3rd. FLR. ~ 1 REQ'D (WEST) | BLDG-2/2nd.-3rd. FLR. ~ 1 REQ'D (WEST)

SAMPLE

REVISIONS	BY
△	
△	
△	
△	
△	

BMR
DRAFTING SERVICE
SINCE 1988
23846 SUNNYMEAD BLVD.
SUITE #6
MORENO VALLEY, CA 92553
B: (951) 243-7614
F: (951) 243-7673

GLASS FACTORY
26383 BASE LINE
HIGHLAND, CA 92346

JOB NAME: INLAND REGIONAL CENTER BTS
ARCHITECT: WARE MALCOMB
SHEET DESCRIPTION: ELEVATIONS

DATE: 10-30-08
SCALE: 3/8"=1'-0"
DRAWN: MAC/BMR
JOB NO: 068-08
SHEET NO: 3.07

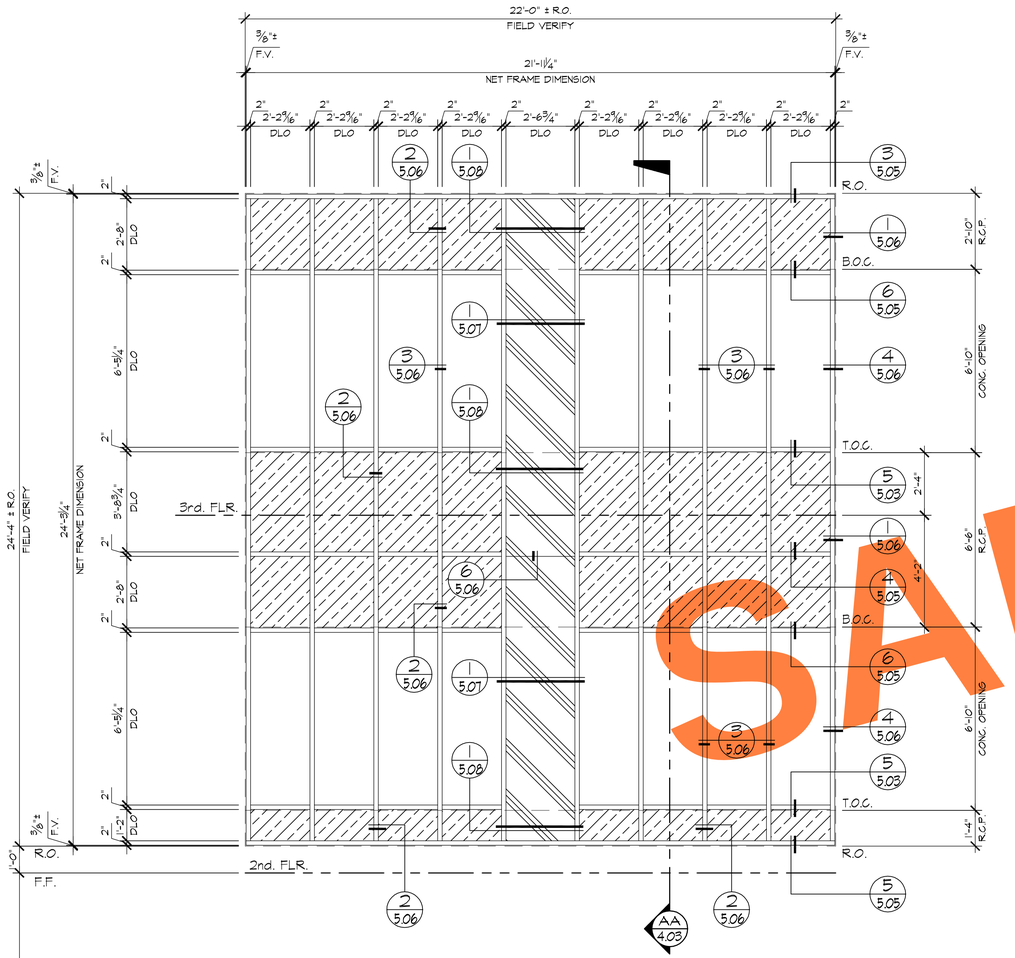

A 3.08 ELEVATION (AFG451 & AF175)

LOCATION

BLDG-1/2nd.-3rd. FLR. ~ 1 REQ'D (NORTH)

BLDG-2/2nd.-3rd. FLR. ~ 1 REQ'D (SOUTH)

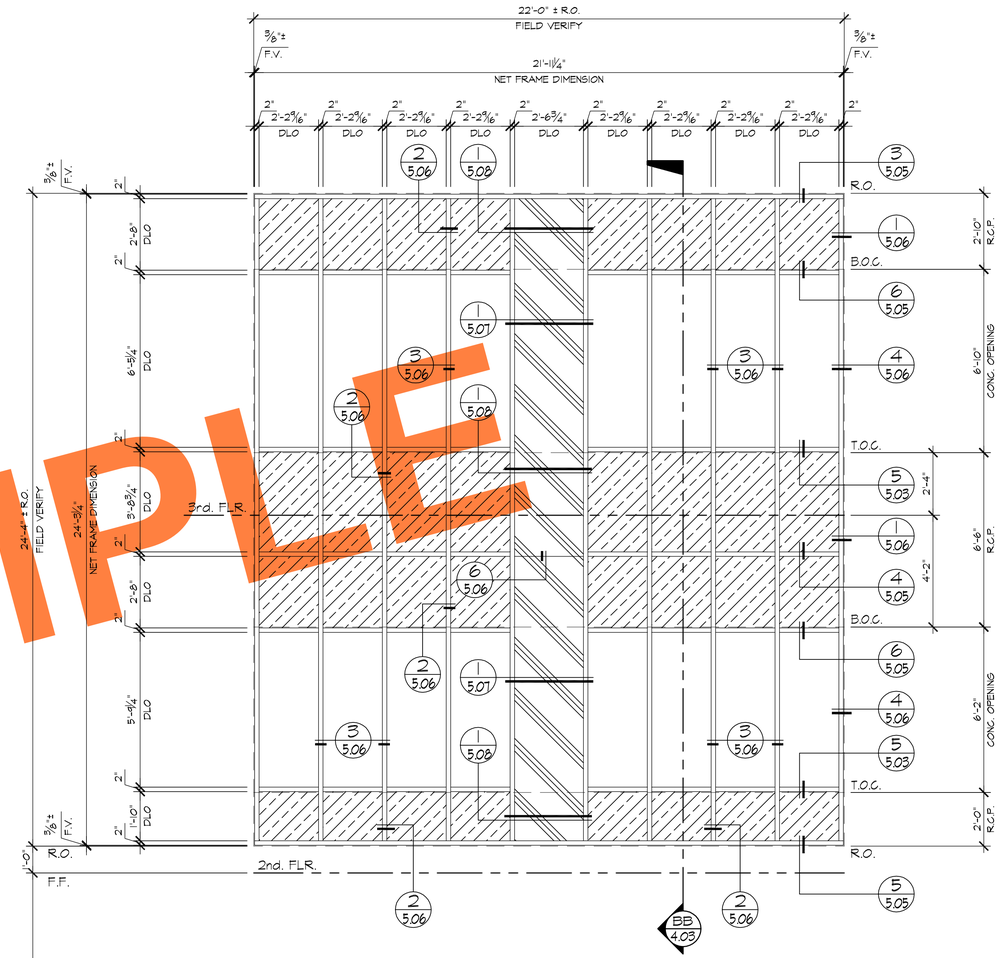

B 3.08 ELEVATION (AFG451 & AF175)

LOCATION

BLDG-1/2nd.-3rd. FLR. ~ 1 REQ'D (NORTH)

BLDG-2/2nd.-3rd. FLR. ~ 1 REQ'D (SOUTH)

SAMPLE

REVISIONS	BY
△	
△	
△	
△	
△	

BMR
DRAFTING SERVICE
SINCE 1988
23846 SUNNYMEAD BLVD.
SUITE #6
MORENO VALLEY, CA 92553
B: (951) 243-7614
F: (951) 243-7673

GLASS FACTORY
26383 BASE LINE
HIGHLAND, CA 92346

JOB NAME: INLAND REGIONAL CENTER BTS

ARCHITECT: WARE MALCOMB

SHEET DESCRIPTION: ELEVATIONS

DATE: 10-30-08

SCALE: 3/8"=1'-0"

DRAWN: MAC/BMR

JOB NO: 068-08

SHEET NO: 3.08

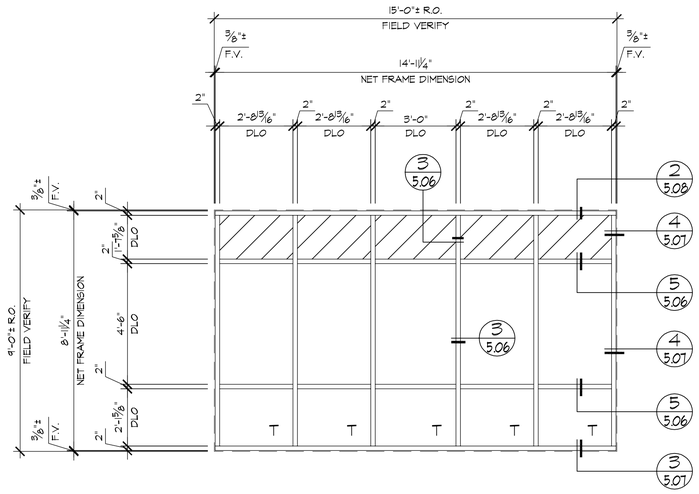

A 3.09 ELEVATION (AFG451)
LOCATION
LOBBY/1st. FLR. ~ 2 REQ'D (EAST)

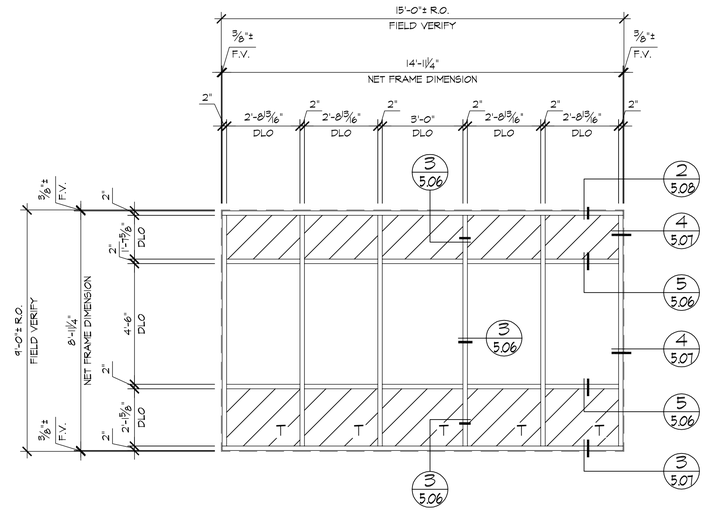

B 3.09 ELEVATION (AFG451)
LOCATION
LOBBY/1st. FLR. ~ 2 REQ'D (WEST)

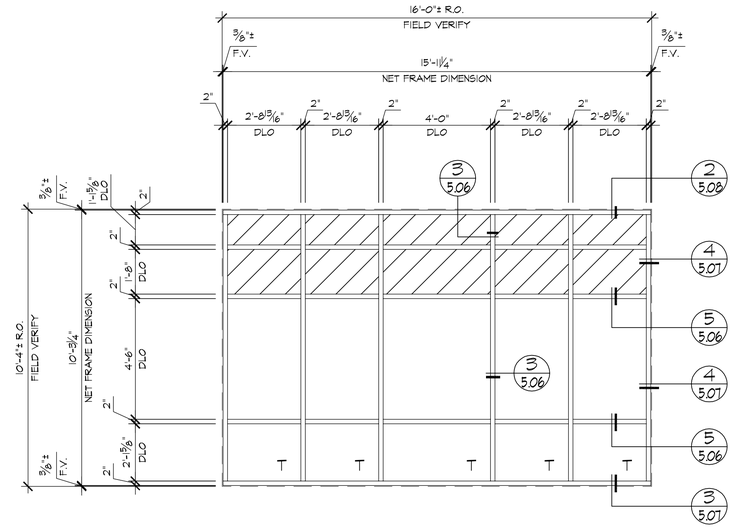

C 3.09 ELEVATION (AFG451)
LOCATION
LOBBY/1st. FLR. ~ 2 REQ'D (EAST)

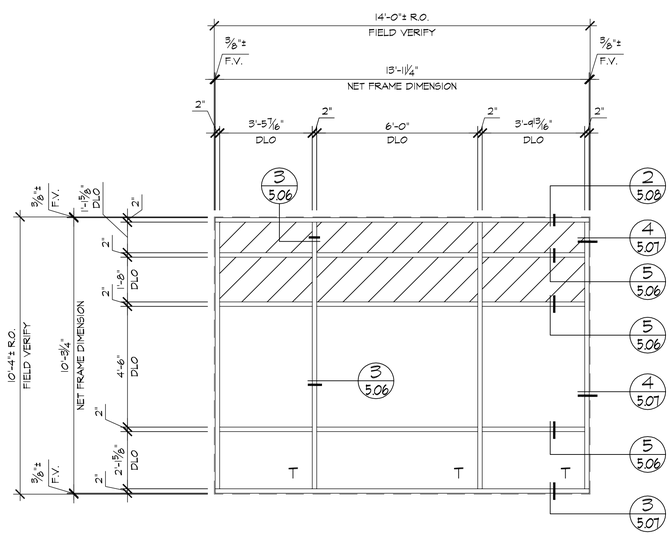

D 3.09 ELEVATION (AFG451)
LOCATION
LOBBY/1st. FLR. ~ 1 REQ'D (EAST)

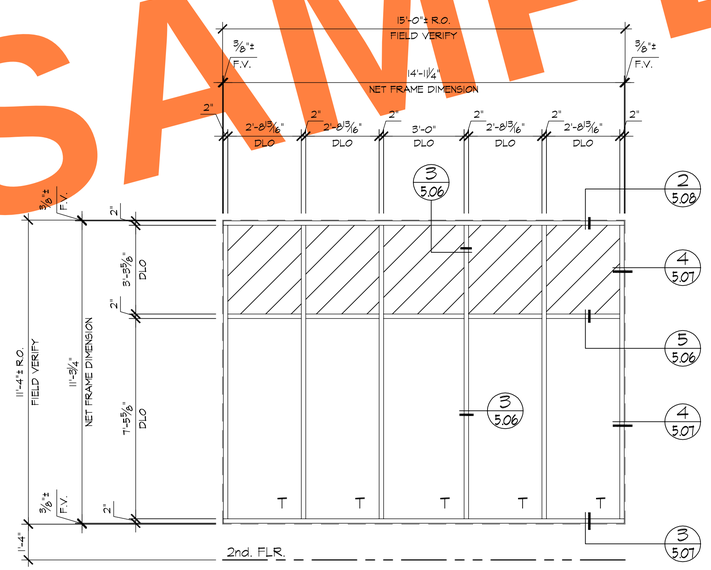

E 3.09 ELEVATION (AFG451)
LOCATION
LOBBY/2nd. FLR. ~ 2 REQ'D (WEST)

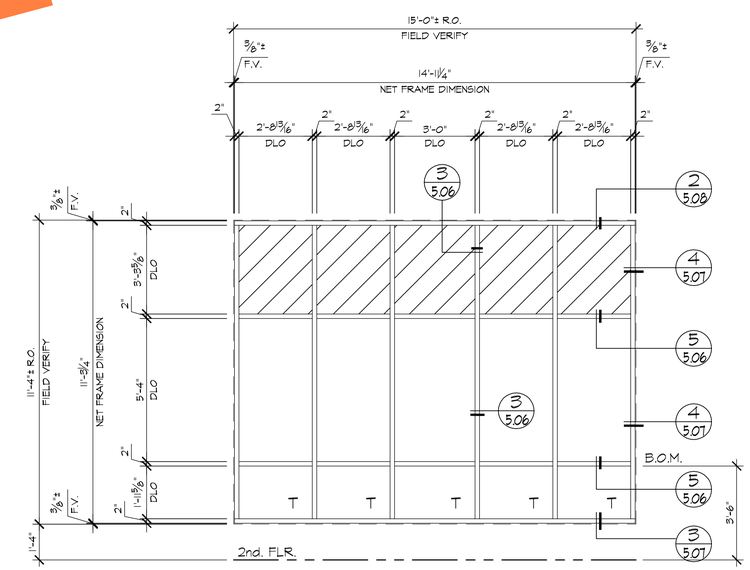

F 3.09 ELEVATION (AFG451)
LOCATION
LOBBY/2nd. FLR. ~ 2 REQ'D (EAST)

SAMPLE

REVISIONS	BY
△	
△	
△	
△	
△	

BMR
DRAFTING SERVICE
SINCE 1988
23846 SUNNYMEAD BLVD.
SUITE #6
MORENO VALLEY, CA 92553
B: (951) 243-7614
F: (951) 243-7673

GLASS FACTORY
26383 BASE LINE
HIGHLAND, CA 92346

JOB NAME: INLAND REGIONAL CENTER BTS
ARCHITECT: WARE MALCOMB
SHEET DESCRIPTION: ELEVATIONS

DATE: 10-30-08
SCALE: 3/8"=1'-0"
DRAWN: MAC/BMR
JOB NO: 068-08
SHEET NO: 3.09

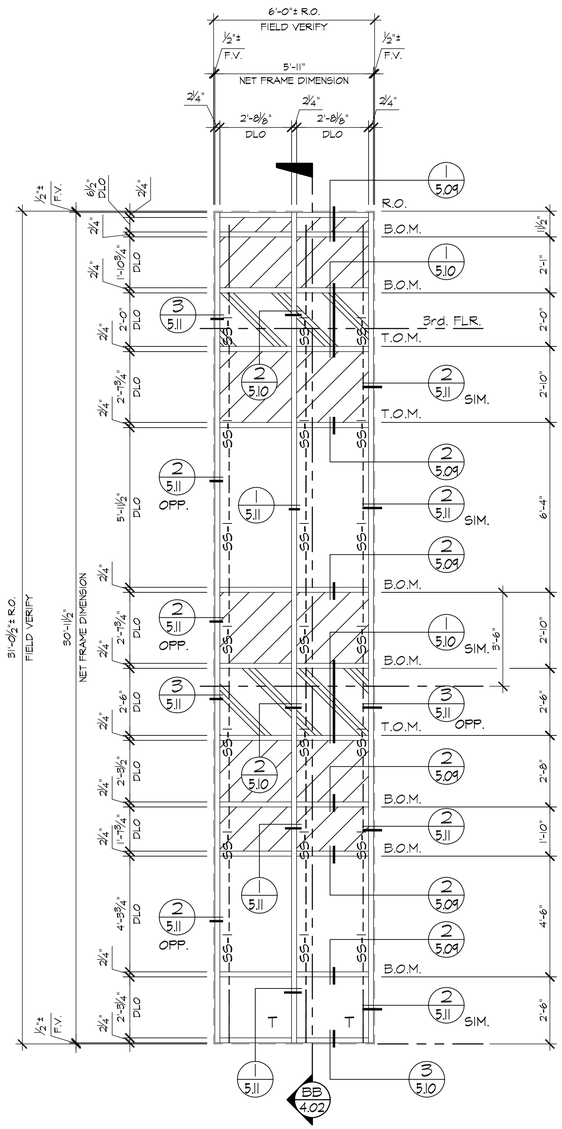

A 3.10 ELEVATION (T500 OPG-3000)

LOCATION

LOBBY/1st.-3rd. FLR. ~ 1 REQ'D (SOUTH)
LOBBY/1st.-3rd. FLR. ~ 1 REQ'D (NORTH)

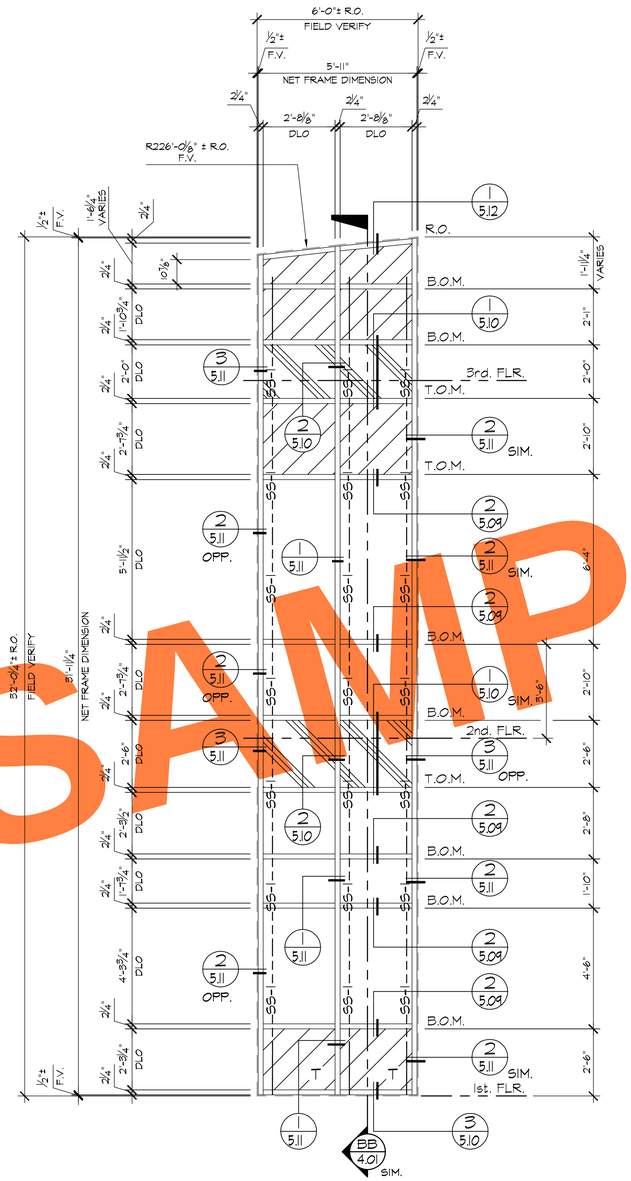

B 3.10 ELEVATION (T500 OPG-3000)

LOCATION

LOBBY/1st.-3rd. FLR. ~ 1 REQ'D (WEST)
LOBBY/1st.-3rd. FLR. ~ 1 REQ'D/OPP. (WEST)

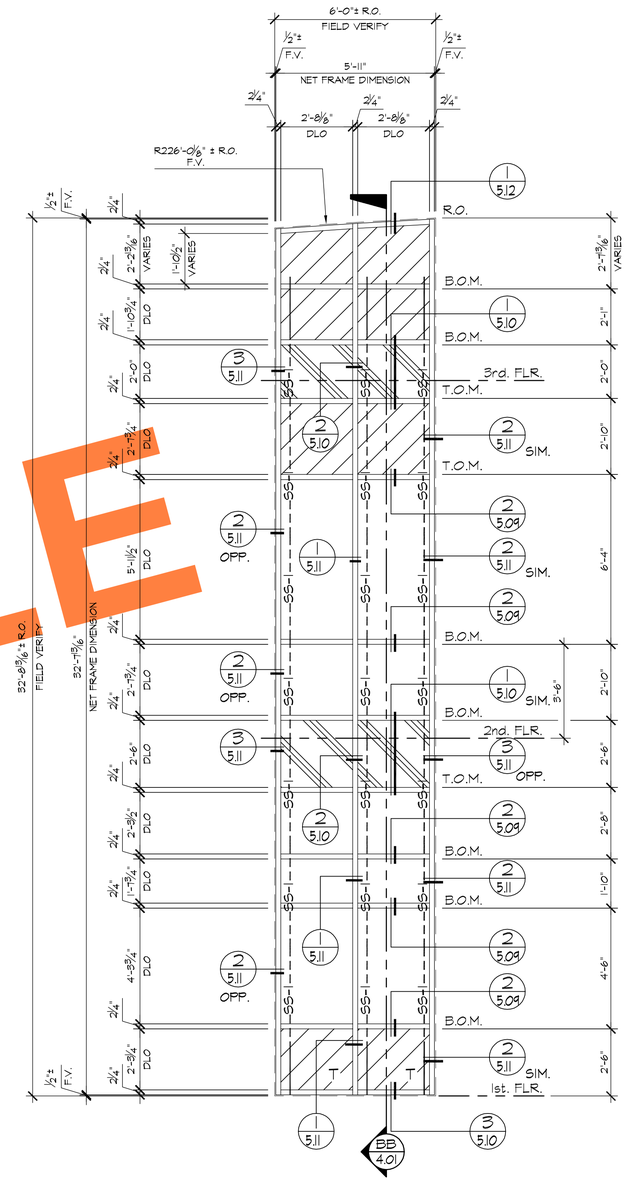

C 3.10 ELEVATION (T500 OPG-3000)

LOCATION

LOBBY/1st.-3rd. FLR. ~ 1 REQ'D (WEST)
LOBBY/1st.-3rd. FLR. ~ 1 REQ'D (WEST)

SAMPLE

REVISIONS	BY
△	
△	
△	
△	
△	

BMR
DRAFTING SERVICE
SINCE 1988
23846 SUNNYMEAD BLVD.
SUITE #6
MORENO VALLEY, CA 92553
B: (951) 243-7614
F: (951) 243-7673

GLASS FACTORY
26383 BASE LINE
HIGHLAND, CA 92346

JOB NAME: INLAND REGIONAL CENTER BTS
ARCHITECT: WARE MALCOMB
SHEET DESCRIPTION: ELEVATIONS

DATE: 10-30-08
SCALE: 3/8"=1'-0"
DRAWN: MAC/BMR
JOB NO: 068-08
SHEET NO: 3.10

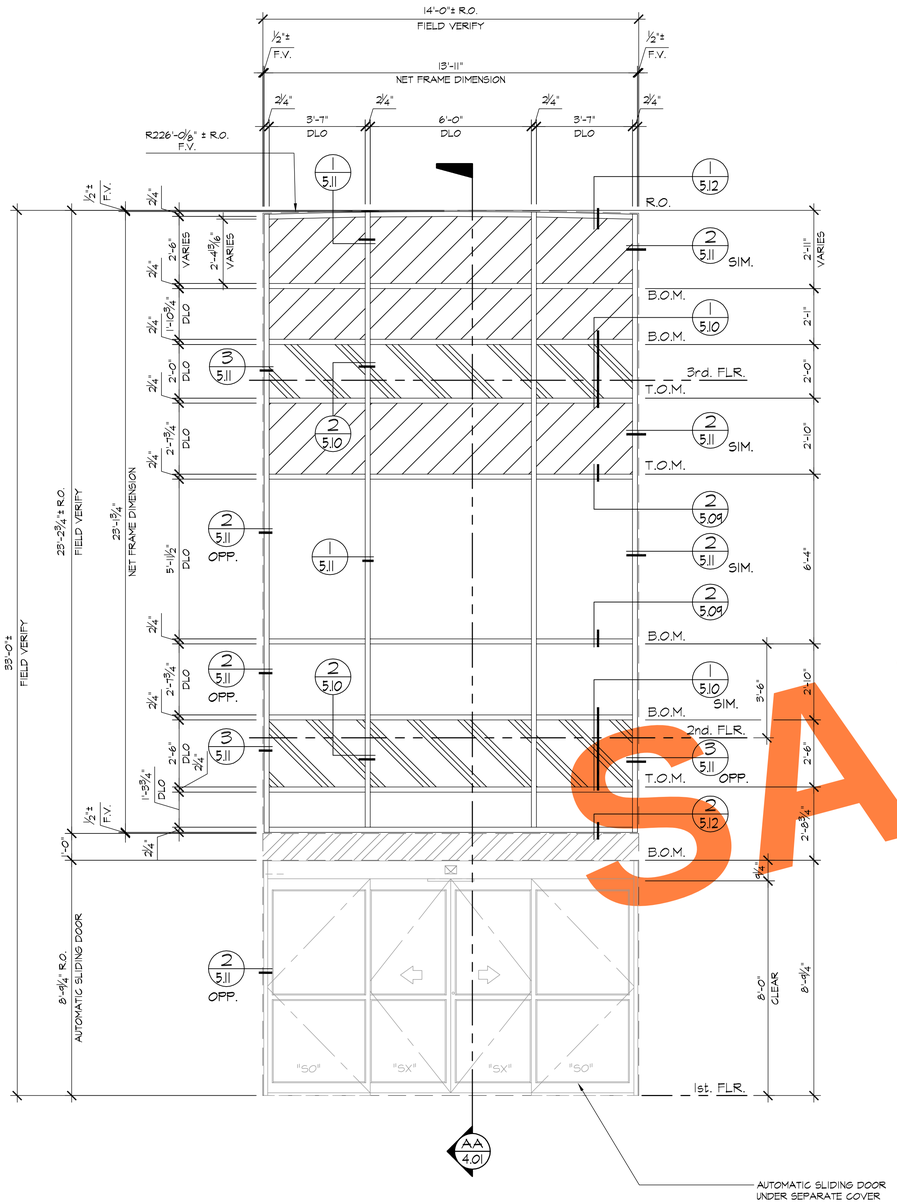

A 3.11 ELEVATION (T500 OPG-3000)

LOCATION

LOBBY/1st.-3rd. FLR. ~ 1 REQ'D (WEST)

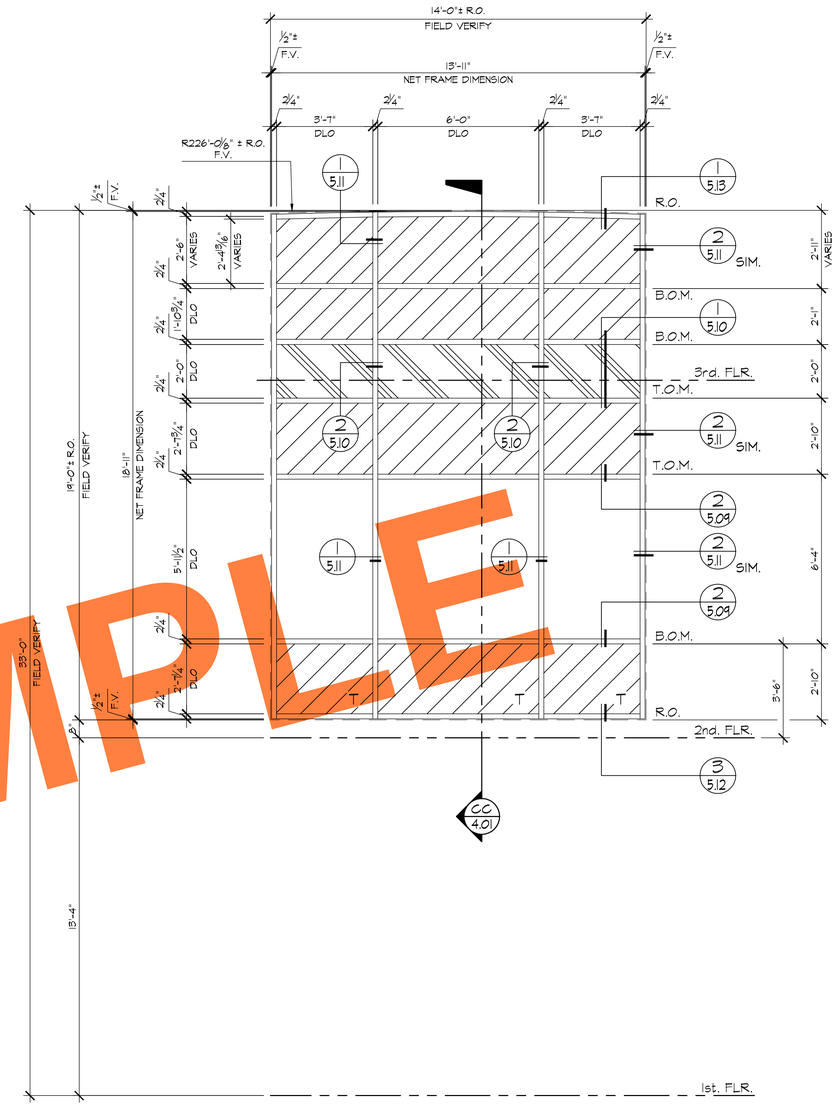

B 3.11 ELEVATION (T500 OPG-3000)

LOCATION

LOBBY/2nd.-3rd. FLR. ~ 1 REQ'D (EAST)

SAMPLE

REVISIONS	BY
△	
△	
△	
△	
△	

BMR
DRAFTING SERVICE
SINCE 1988
23846 SUNNYMEAD BLVD.
SUITE #6
MORENO VALLEY, CA 92553
B: (951) 243-7614
F: (951) 243-7673

GLASS FACTORY
26383 BASE LINE
HIGHLAND, CA 92346

JOB NAME: INLAND REGIONAL CENTER BTS

ARCHITECT: WARE MALCOMB

SHEET DESCRIPTION: ELEVATIONS

DATE: 10-30-08

SCALE: 3/8"=1'-0"

DRAWN: MAC/BMR

JOB NO: 068-08

SHEET NO: 3.11

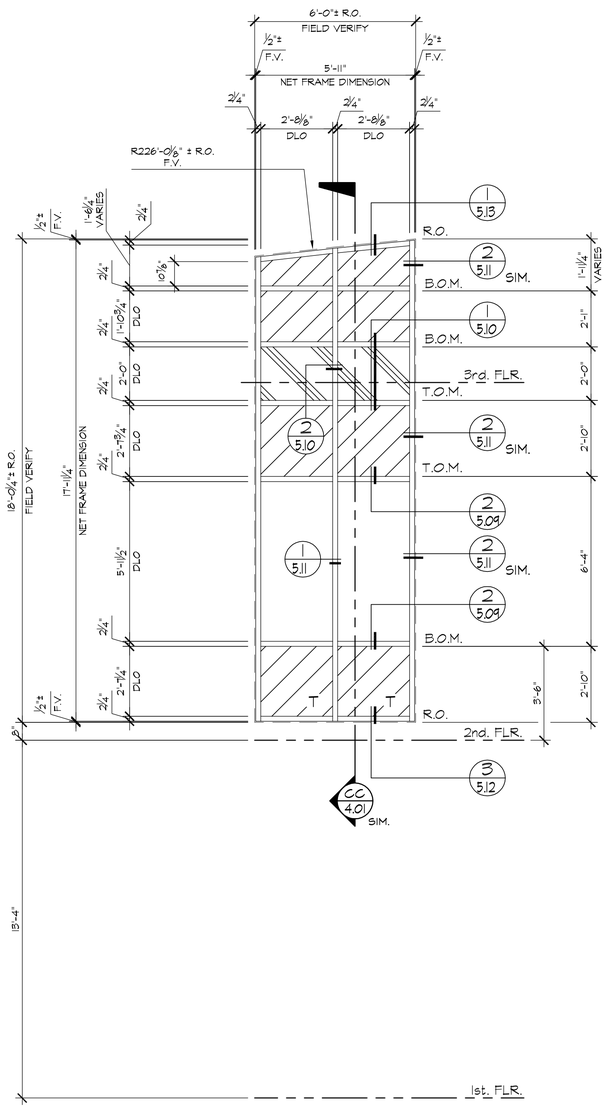

A 3.12 ELEVATION (T500 OPG-3000)

LOCATION

LOBBY/2nd.-3rd. FLR. ~ 1 REQ'D (EAST)

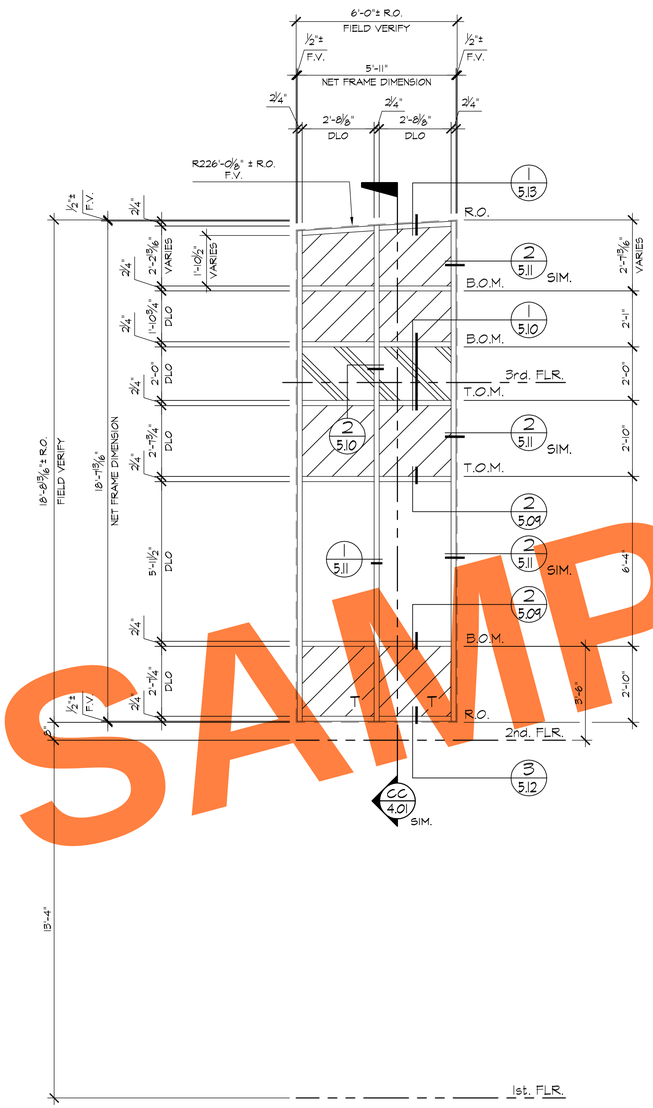

B 3.12 ELEVATION (T500 OPG-3000)

LOCATION

LOBBY/2nd.-3rd. FLR. ~ 1 REQ'D (EAST)
LOBBY/2nd.-3rd. FLR. ~ 1 REQ'D/OPP. (EAST)

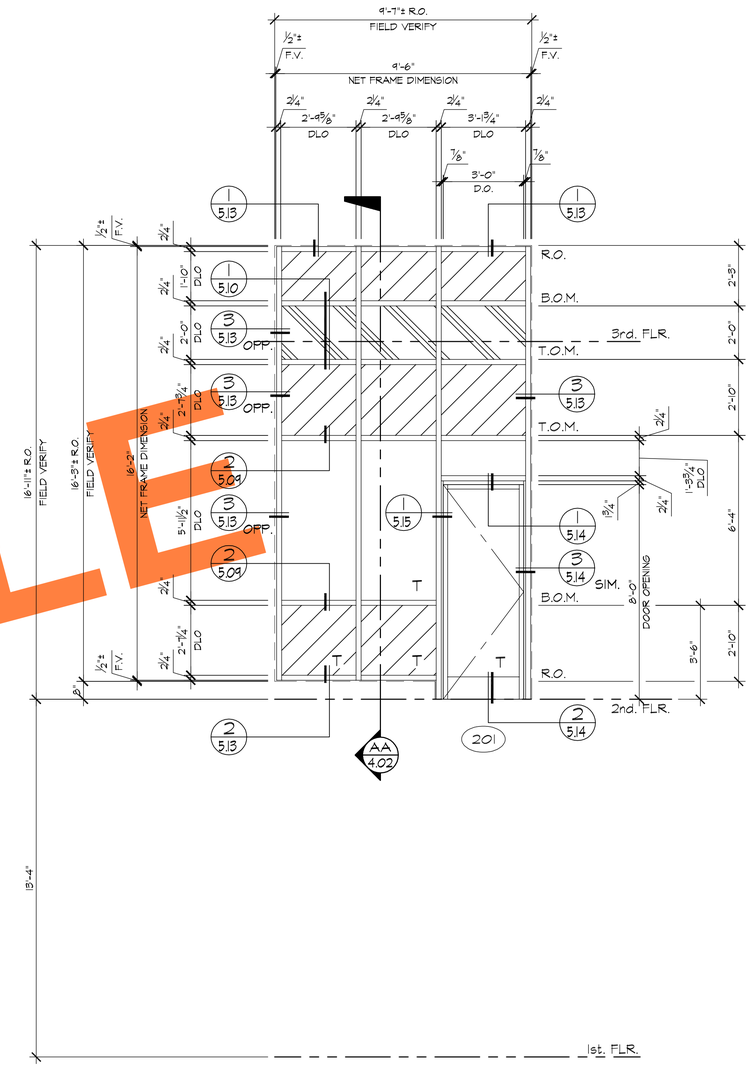

C 3.12 ELEVATION (T500 OPG-3000)

LOCATION

LOBBY/2nd.-3rd. FLR. ~ 1 REQ'D (EAST)

SAMPLE

REVISIONS	BY
△	
△	
△	
△	
△	

BMR
DRAFTING SERVICE
SINCE 1988
23846 SUNNYMEAD BLVD.
SUITE #6
MORENO VALLEY, CA 92553
B: (951) 243-7614
F: (951) 243-7673

GLASS FACTORY
26383 BASE LINE
HIGHLAND, CA 92346

JOB NAME: INLAND REGIONAL CENTER BTS
ARCHITECT: WARE MALCOMB
SHEET DESCRIPTION: ELEVATIONS

DATE: 10-30-08
SCALE: 3/8"=1'-0"
DRAWN: MAC/BMR
JOB NO: 068-08
SHEET NO: 3.12

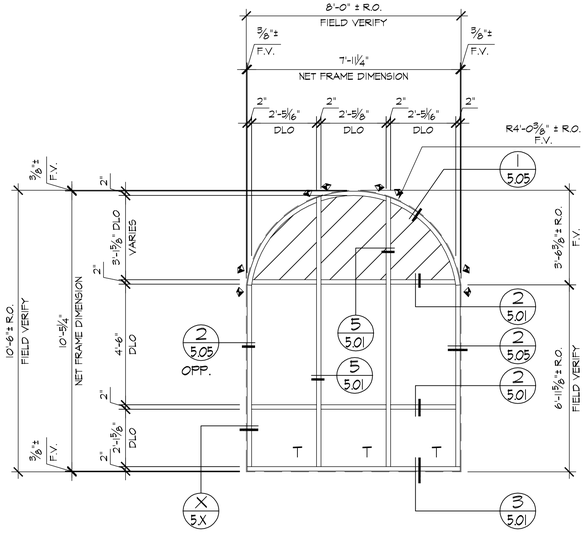

A 3.13 ELEVATION (AG451)

LOCATION

BLDG-3/1st. FLR. ~ 9 REQ'D (EAST)
BLDG-3/1st. FLR. ~ 3 REQ'D (SOUTH)
BLDG-3/1st. FLR. ~ 10 REQ'D (WEST)
BLDG-3/1st. FLR. ~ 2 REQ'D (NORTH)

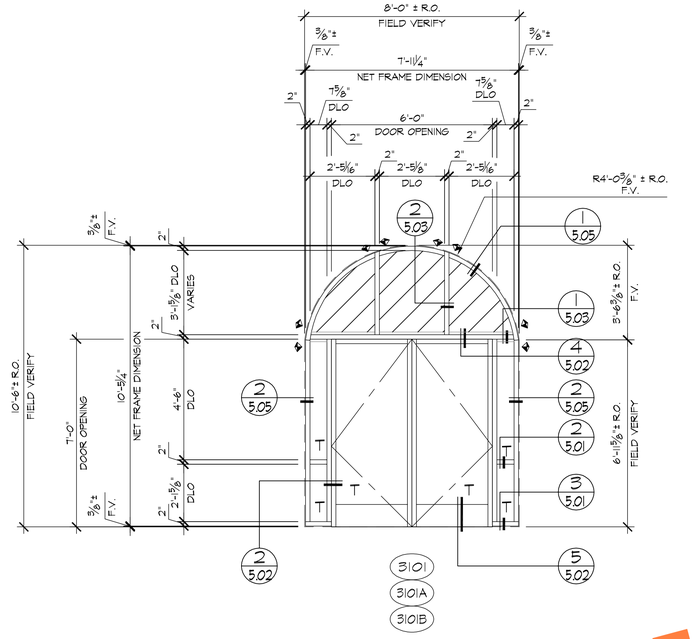

B 3.13 ELEVATION (AG451)

LOCATION

BLDG-3/1st. FLR. ~ 3 REQ'D (EAST)

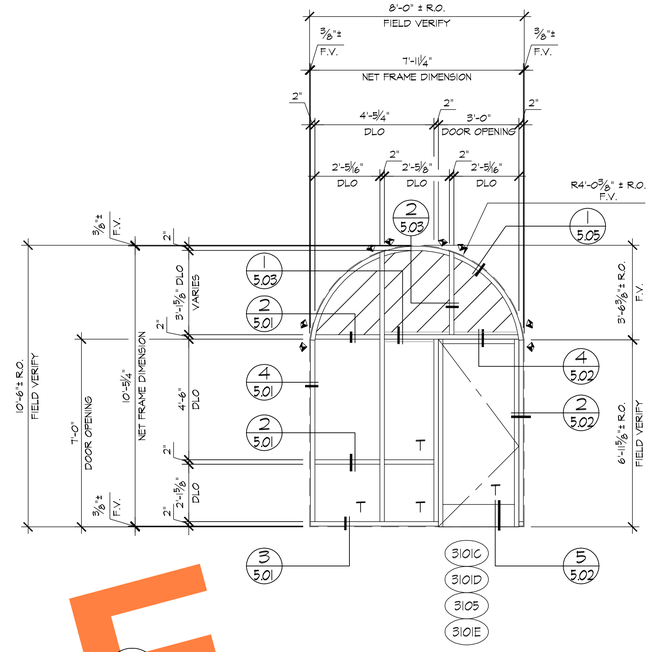

C 3.13 ELEVATION (AG451)

LOCATION

BLDG-3/1st. FLR. ~ 3 REQ'D (SOUTH)
BLDG-3/1st. FLR. ~ 1 REQ'D/OPP. (SOUTH)

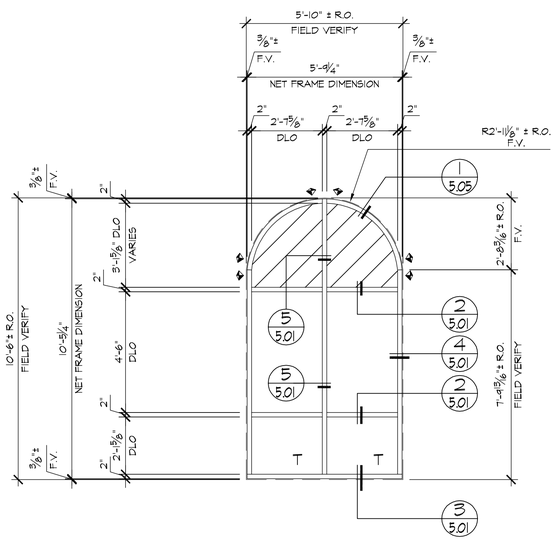

D 3.13 ELEVATION (AG451)

LOCATION

BLDG-3/1st. FLR. ~ 2 REQ'D (SOUTH)
BLDG-3/1st. FLR. ~ 2 REQ'D (NORTH)

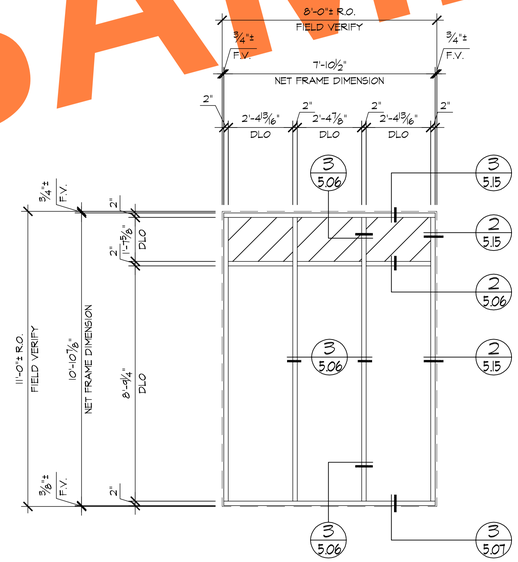

E 3.13 ELEVATION (AFG451)

LOCATION

BLDG-3/2nd. FLR. ~ 4 REQ'D (EAST)
BLDG-3/2nd. FLR. ~ 2 REQ'D (SOUTH)
BLDG-3/2nd. FLR. ~ 2 REQ'D (NORTH)

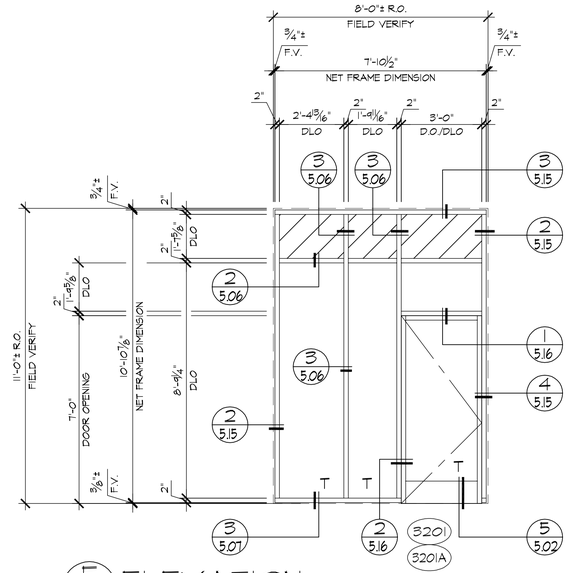

F 3.13 ELEVATION (AFG451)

LOCATION

BLDG-3/2nd. FLR. ~ 1 REQ'D (EAST)
BLDG-3/2nd. FLR. ~ 1 REQ'D/OPP. (EAST)

SAMPLE

REVISIONS	BY
△	
△	
△	
△	
△	

BMR
DRAFTING SERVICE
SINCE 1988
23846 SUNNYMEAD BLVD.
SUITE #6
MORENO VALLEY, CA 92553
B: (951) 243-7614
F: (951) 243-7673

GLASS FACTORY
26383 BASE LINE
HIGHLAND, CA 92346

JOB NAME: INLAND REGIONAL CENTER BTS
ARCHITECT: WARE MALCOMB
SHEET DESCRIPTION: ELEVATIONS

DATE: 10-30-08
SCALE: 3/8"=1'-0"
DRAWN: MAC/BMR
JOB NO: 068-08
SHEET NO: 3.13

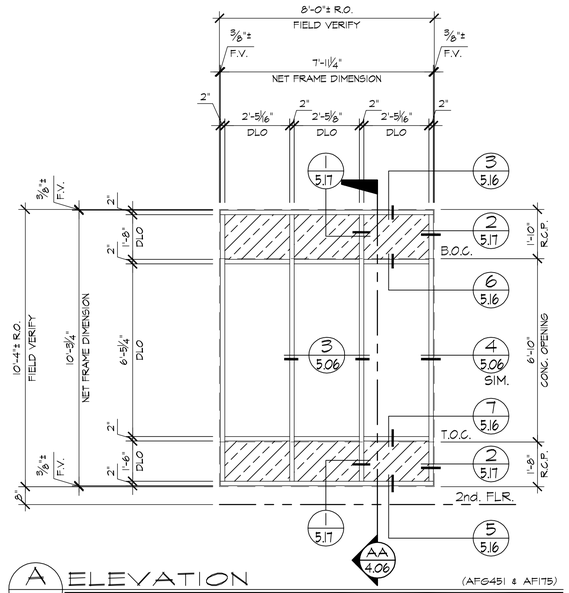

A 3.14 ELEVATION (AFG451 & AF1175)

LOCATION

BLDG-3/2nd. FLR. ~ 6 REQ'D (EAST)
BLDG-3/2nd. FLR. ~ 5 REQ'D (SOUTH)
BLDG-3/2nd. FLR. ~ 8 REQ'D (WEST)

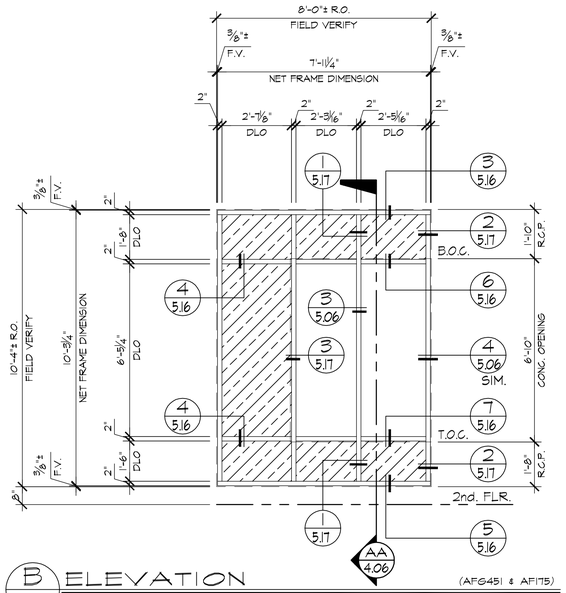

B 3.14 ELEVATION (AFG451 & AF1175)

LOCATION

BLDG-3/2nd. FLR. ~ 1 REQ'D (WEST)
BLDG-3/2nd. FLR. ~ 1 REQ'D/OPP. (WEST)

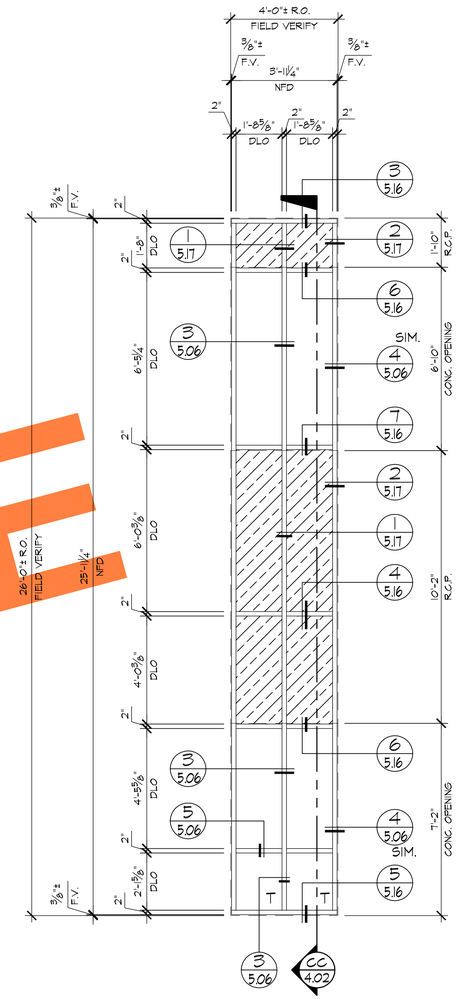

E 3.14 ELEVATION (AFG451 & AF1175)

LOCATION

BLDG-3/1st.-2nd. FLR. ~ 2 REQ'D (EAST)
BLDG-3/1st.-2nd. FLR. ~ 2 REQ'D (WEST)

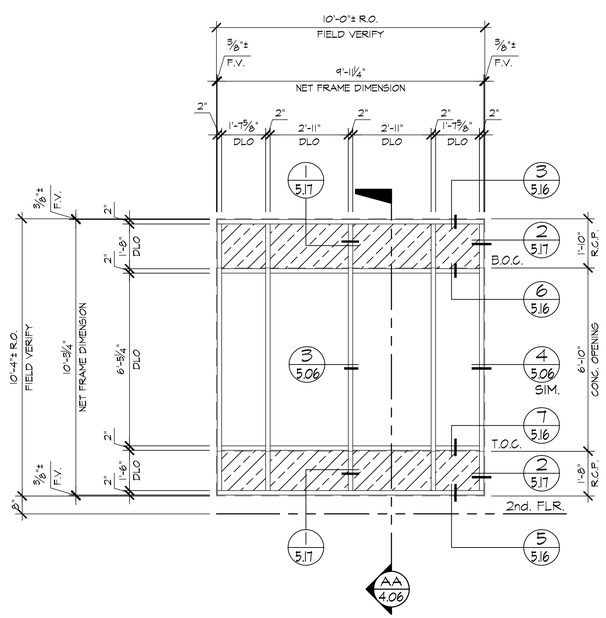

C 3.14 ELEVATION (AFG451 & AF1175)

LOCATION

BLDG-3/2nd. FLR. ~ 1 REQ'D (WEST)

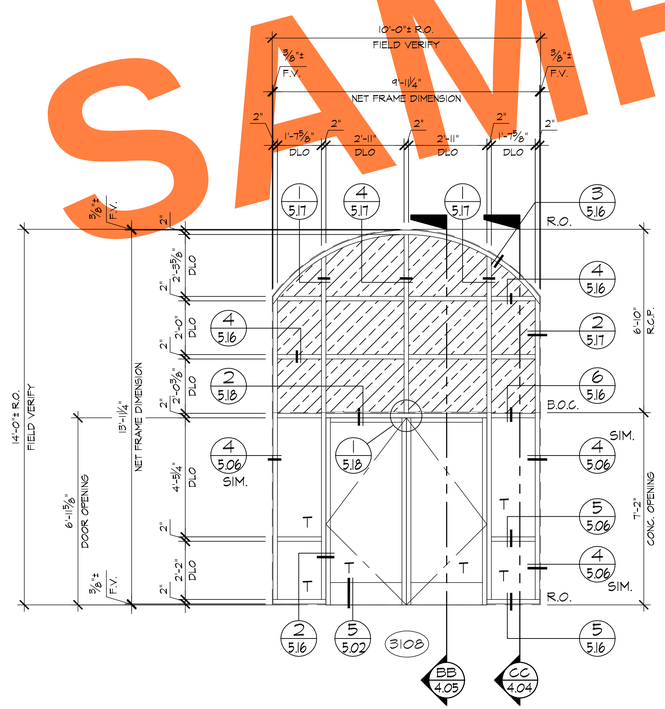

D 3.14 ELEVATION (AFG451 & AF1175)

LOCATION

BLDG-3/1st. FLR. ~ 1 REQ'D (WEST)

SAMPLE

REVISIONS	BY
△	
△	
△	
△	
△	

BMR
DRAFTING SERVICE
SINCE 1988
23846 SUNNYMEAD BLVD.
SUITE #6
MORENO VALLEY, CA 92553
B: (951) 243-7614
F: (951) 243-7673

GLASS FACTORY
26383 BASE LINE
HIGHLAND, CA 92346

JOB NAME: INLAND REGIONAL CENTER BTS
ARCHITECT: WARE MALCOMB
SHEET DESCRIPTION: ELEVATIONS

DATE: 10-30-08
SCALE: 3/8"=1'-0"
DRAWN: MAC/BMR
JOB NO: 068-08
SHEET NO: 3.14

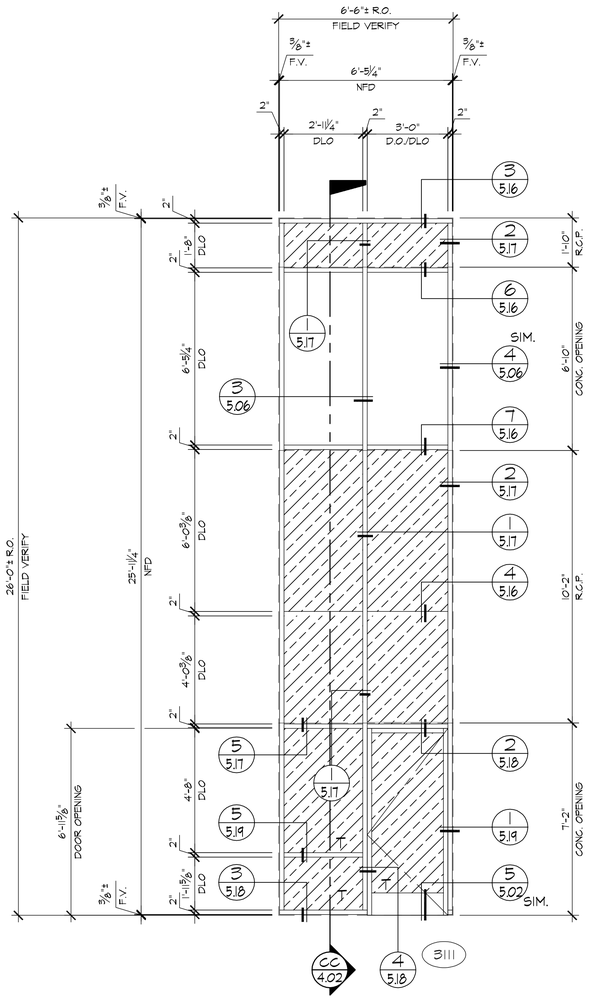

A 3.15 ELEVATION (AFG451 & AFI175)

LOCATION

BLDG-3/1st.-2nd. FLR. ~ 1 REQ'D (SOUTH)

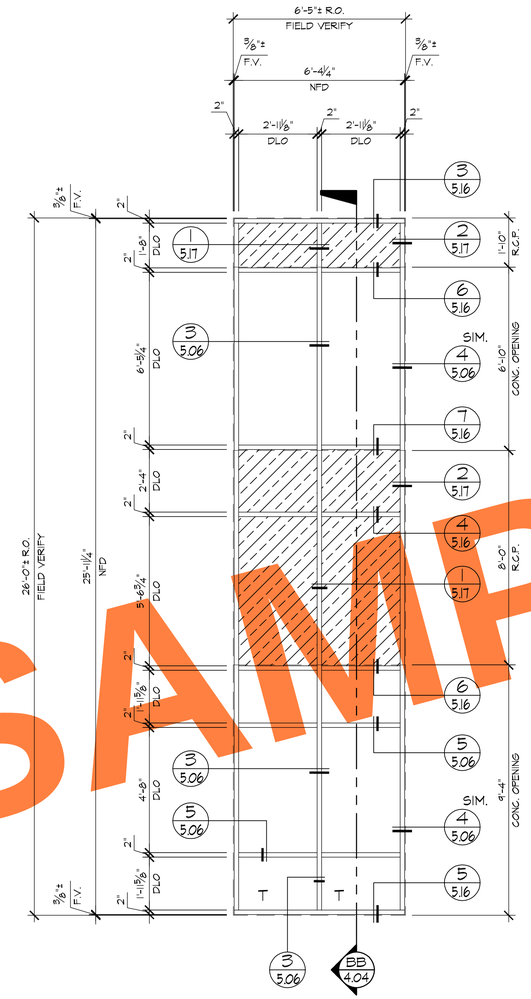

B 3.15 ELEVATION (AFG451 & AFI175)

LOCATION

BLDG-3/1st.-2nd. FLR. ~ 4 REQ'D (NORTH)

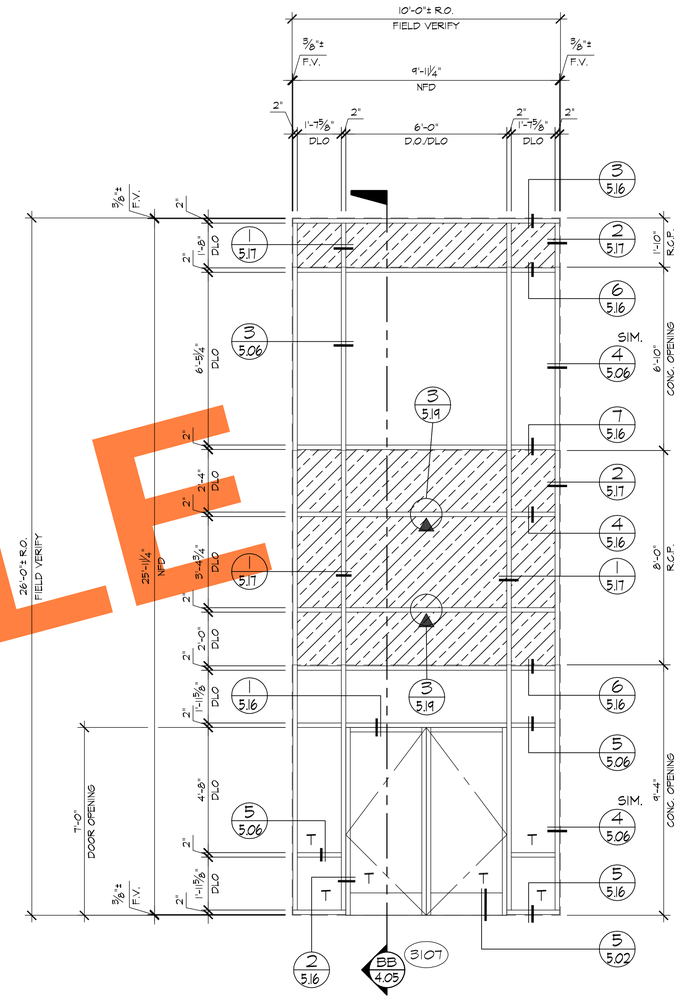

C 3.15 ELEVATION (AFG451 & AFI175)

LOCATION

BLDG-3/1st.-2nd. FLR. ~ 1 REQ'D (NORTH)

SAMPLE

REVISIONS	BY
△	
△	
△	
△	
△	

BMR
DRAFTING SERVICE
SINCE 1988
23846 SUNNYMEAD BLVD.
SUITE #6
MORENO VALLEY, CA 92553
B: (951) 243-7614
F: (951) 243-7673

GLASS FACTORY
26383 BASE LINE
HIGHLAND, CA 92346

JOB NAME: INLAND REGIONAL CENTER BTS

ARCHITECT: WARE MALCOMB

SHEET DESCRIPTION: ELEVATIONS

DATE: 10-30-08

SCALE: 3/8"=1'-0"

DRAWN: MAC/BMR

JOB NO: 068-08

SHEET NO: 3.15

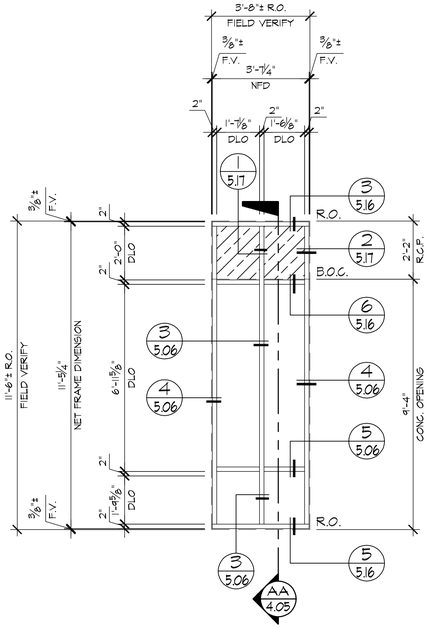

A 3.16 ELEVATION (AFG451 & AFI175)
LOCATION
BLDG-3/1st. FLR. ~ 2 REQ'D (EAST)

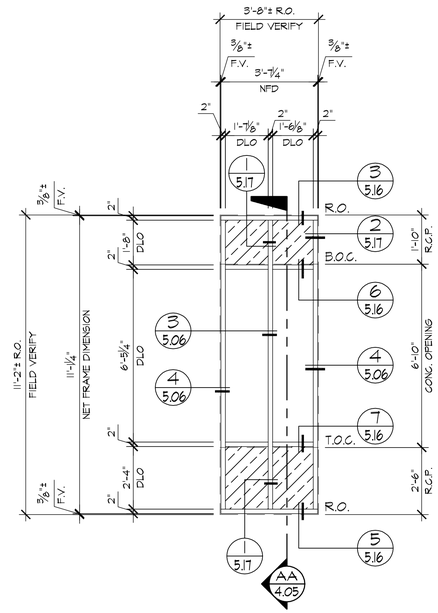

B 3.16 ELEVATION (AFG451 & AFI175)
LOCATION
BLDG-3/2nd. FLR. ~ 2 REQ'D (EAST)

SAMPLE

REVISIONS	BY
△	
△	
△	
△	
△	

BMR
DRAFTING SERVICE
SINCE 1988
23846 SUNNYMEAD BLVD.
SUITE #6
MORENO VALLEY, CA 92553
B: (951) 243-7614
F: (951) 243-7673

GLASS FACTORY
26383 BASE LINE
HIGHLAND, CA 92346

JOB NAME: INLAND REGIONAL CENTER BTS
ARCHITECT: WARE MALCOMB
SHEET DESCRIPTION: ELEVATIONS

DATE: 10-30-08
SCALE: 3/8"=1'-0"
DRAWN: MAC/BMR
JOB NO: 068-08
SHEET NO: 3.16

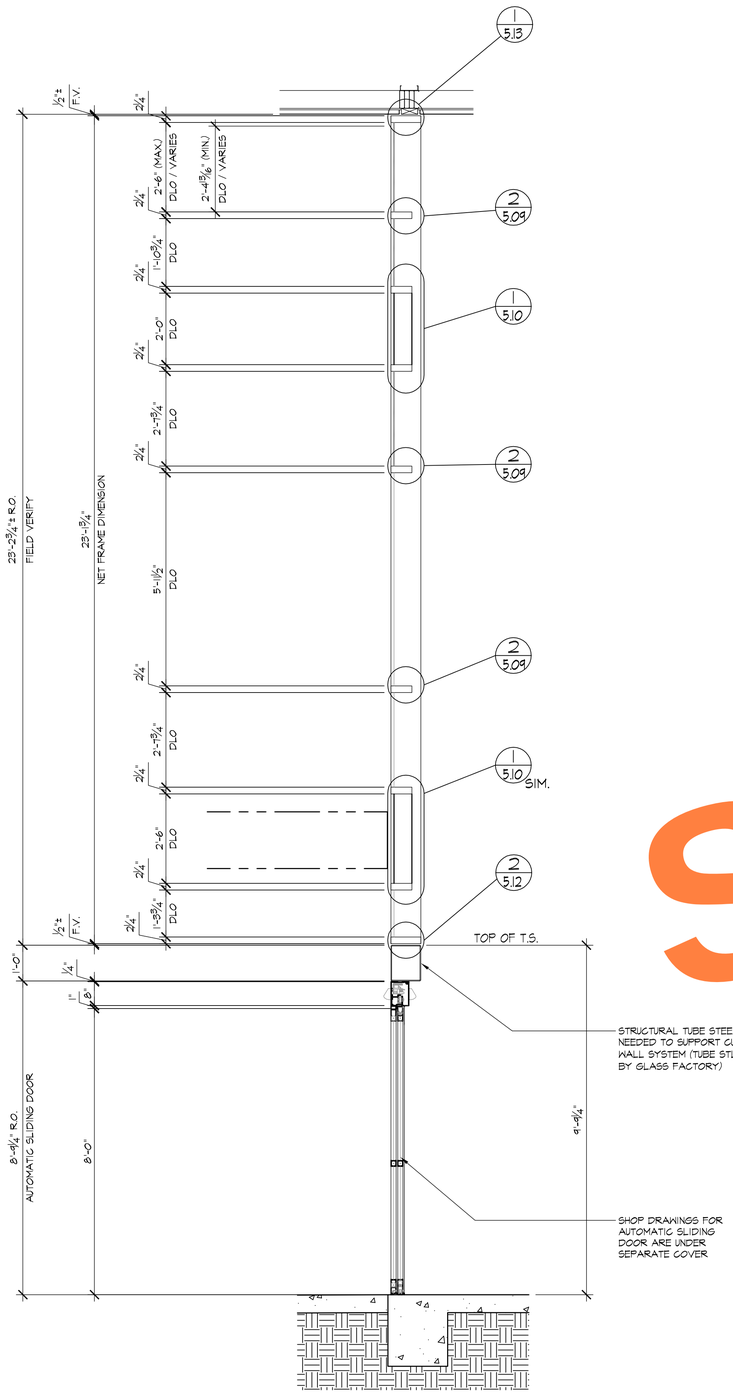

AA 4.01 WALL SECTION
ARCH'L: 3/A6.2

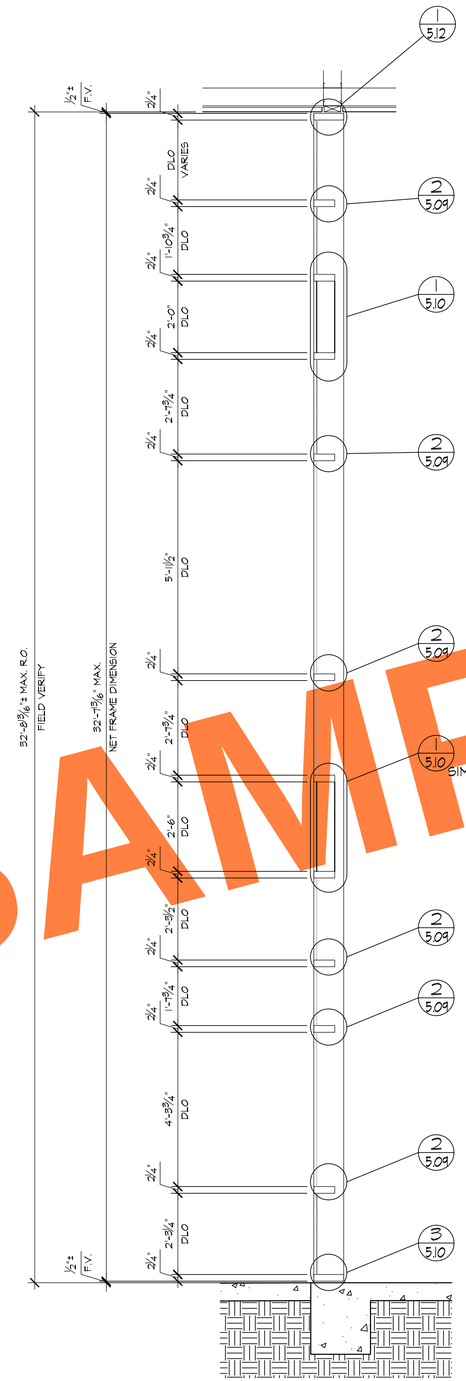

BB 4.01 WALL SECTION
ARCH'L: 2/A6.2

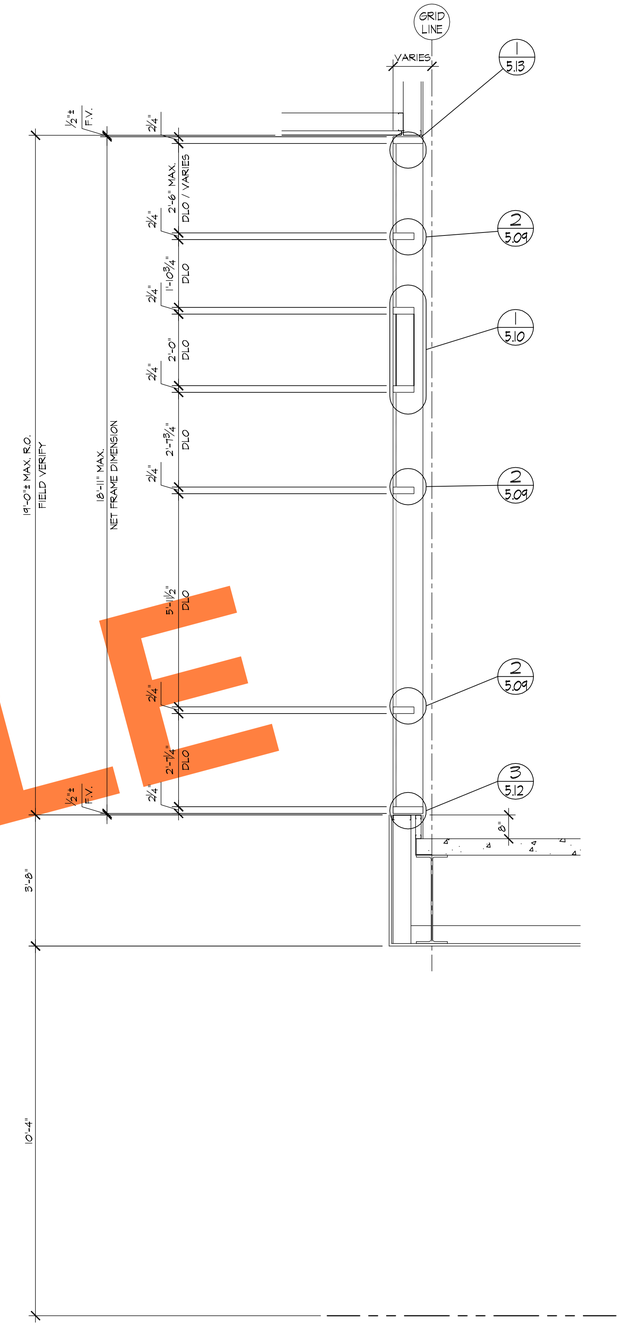

CC 4.01 WALL SECTION
ARCH'L: 2/A6.4

SAMPLE

REVISIONS	BY
△	
△	
△	
△	
△	

BMR
DRAFTING SERVICE
SINCE 1988
23846 SUNNYMEAD BLVD.
SUITE #6
MORENO VALLEY, CA 92553
B: (951) 243-7614
F: (951) 243-7673

GLASS FACTORY
26383 BASE LINE
HIGHLAND, CA 92346

JOB NAME: INLAND REGIONAL CENTER BTS
ARCHITECT: WARE MALCOMB
SHEET DESCRIPTION: WALL SECTIONS

DATE: 10-30-08
SCALE: 1/2"=1'-0"
DRAWN: MAC/BMR
JOB NO: 068-08
SHEET NO: 4.01

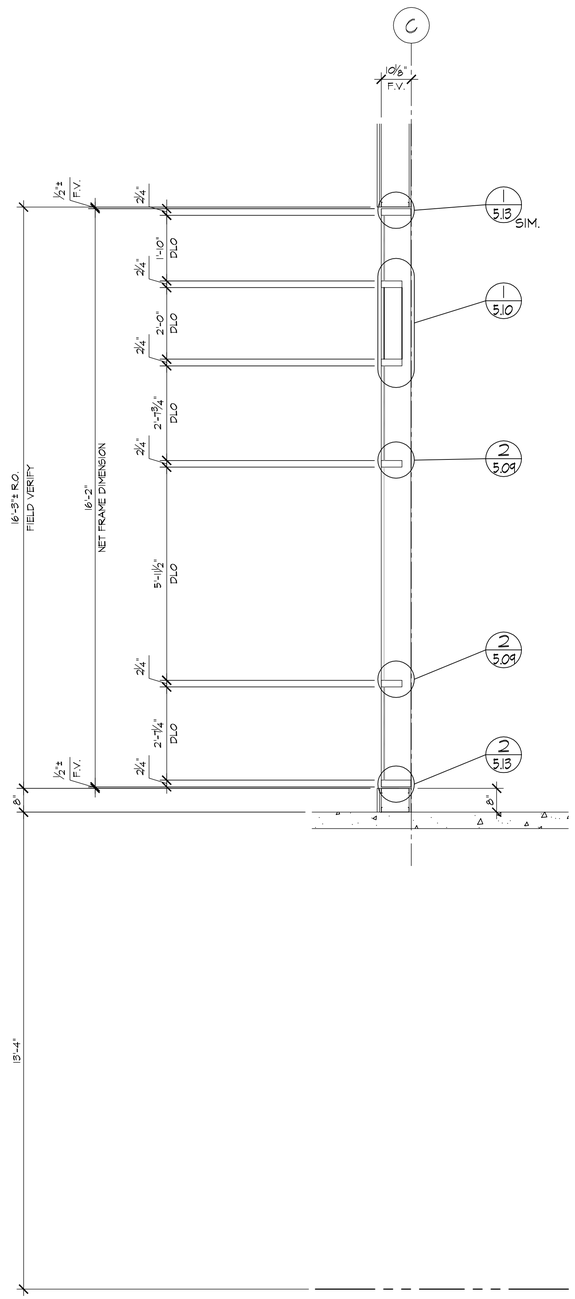

AA 4.02 WALL SECTION
ARCH'L: E/A5.1

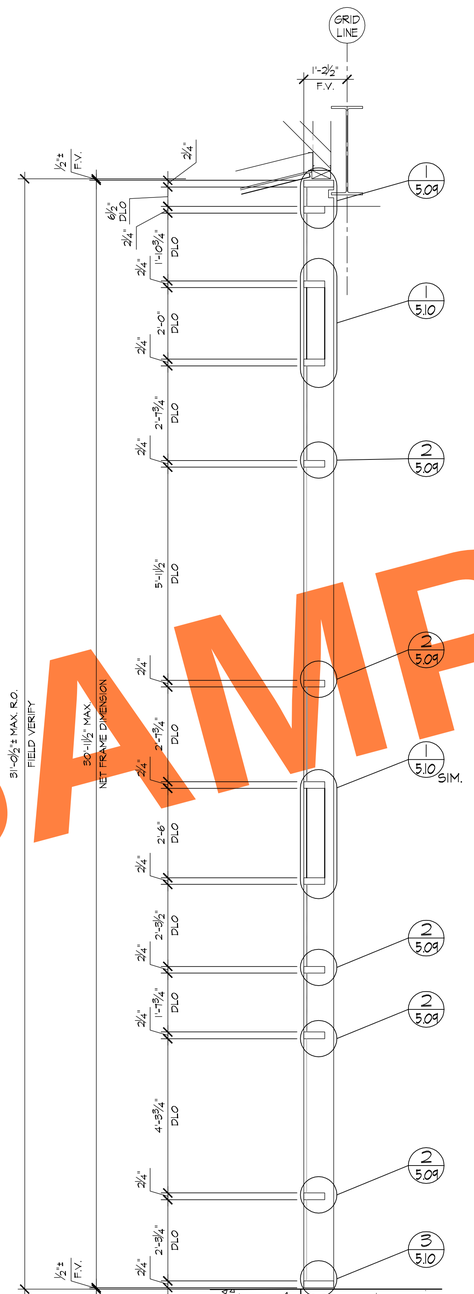

BB 4.02 WALL SECTION
ARCH'L: 3/A6.5

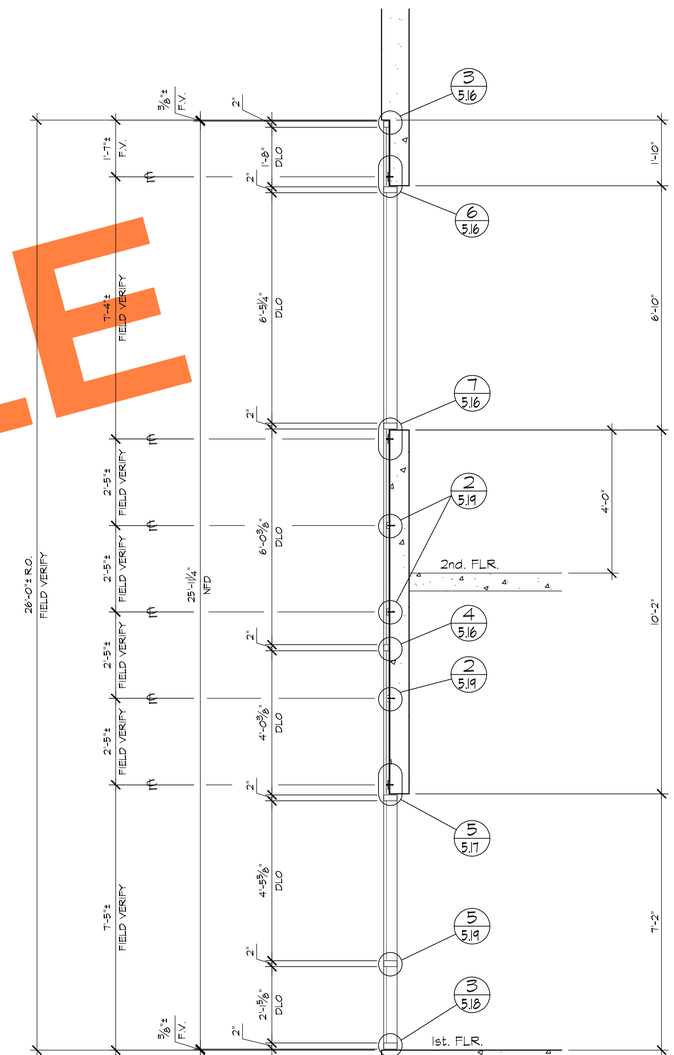

CC 4.02 WALL SECTION
ARCH'L: 5/A6.10

SAMPLE

REVISIONS	BY
△	
△	
△	
△	
△	

BMR
DRAFTING SERVICE
SINCE 1988
23846 SUNNYMEAD BLVD.
SUITE #6
MORENO VALLEY, CA 92553
B: (951) 243-7614
F: (951) 243-7673

GLASS FACTORY
26383 BASE LINE
HIGHLAND, CA 92346

JOB NAME: INLAND REGIONAL CENTER BTS
ARCHITECT: WARE MALCOMB
SHEET DESCRIPTION: WALL SECTIONS

DATE: 10-30-08
SCALE: 1/2"=1'-0"
DRAWN: MAC/BMR
JOB NO: 068-08
SHEET NO: 4.02

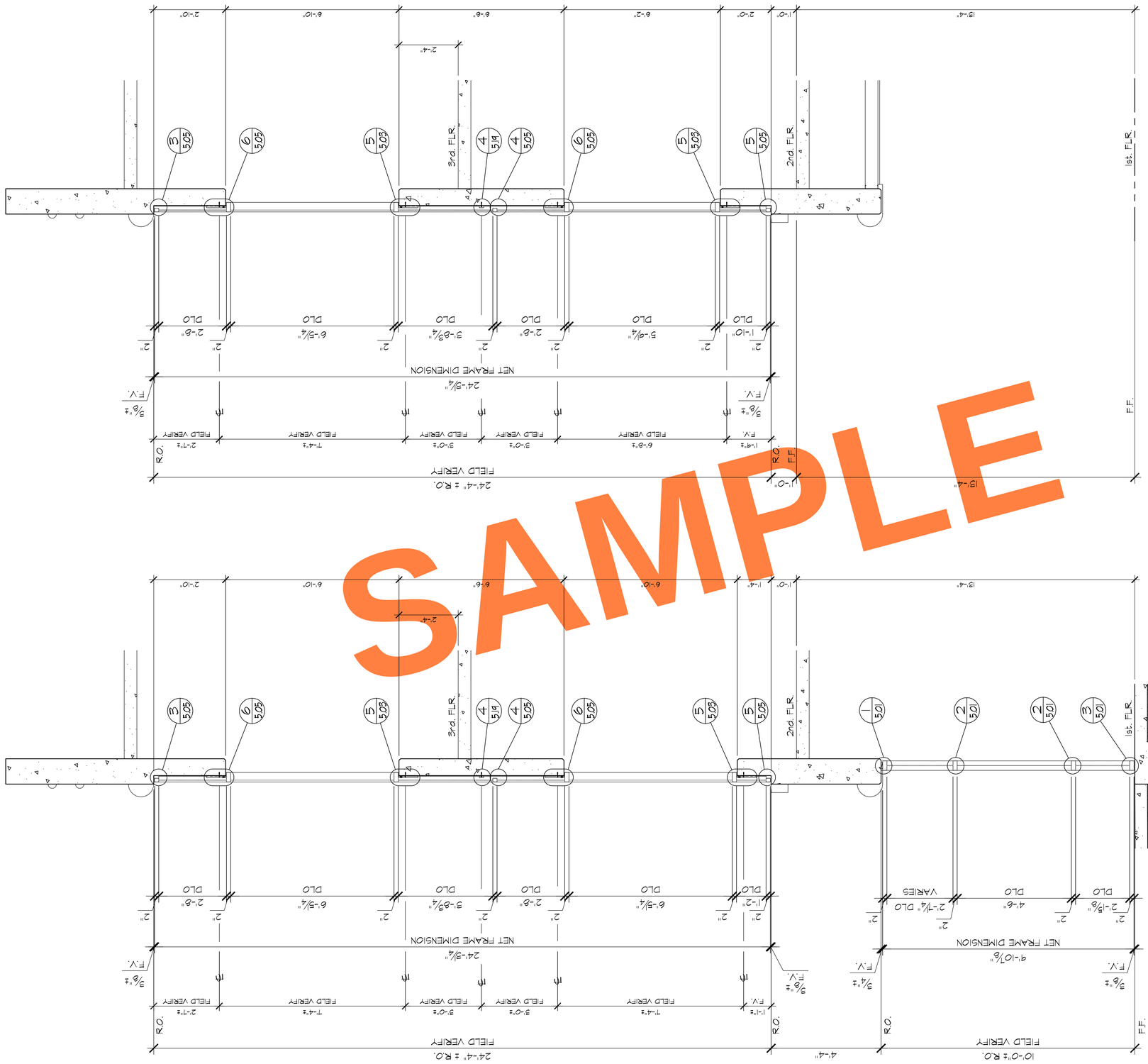

SAMPLE

BB 4.03 WALL SECTION
ARCH'L: 4/A6.8

AA 4.03 WALL SECTION
ARCH'L: 5/A6.8

REVISIONS	BY
△	
△	
△	
△	
△	

BMR
DRAFTING SERVICE
SINCE 1988
23846 SUNNYMEAD BLVD.
SUITE #6
MORENO VALLEY, CA 92553
B: (951) 243-7614
F: (951) 243-7673

GLASS FACTORY
26383 BASE LINE
HIGHLAND, CA 92346

JOB NAME: INLAND REGIONAL CENTER BTS
ARCHITECT: WARE MALCOMB
SHEET DESCRIPTION: WALL SECTIONS

DATE: 10-30-08
SCALE: 1/2"=1'-0"
DRAWN: MAC/BMR
JOB NO: 068-08
SHEET NO: 4.03

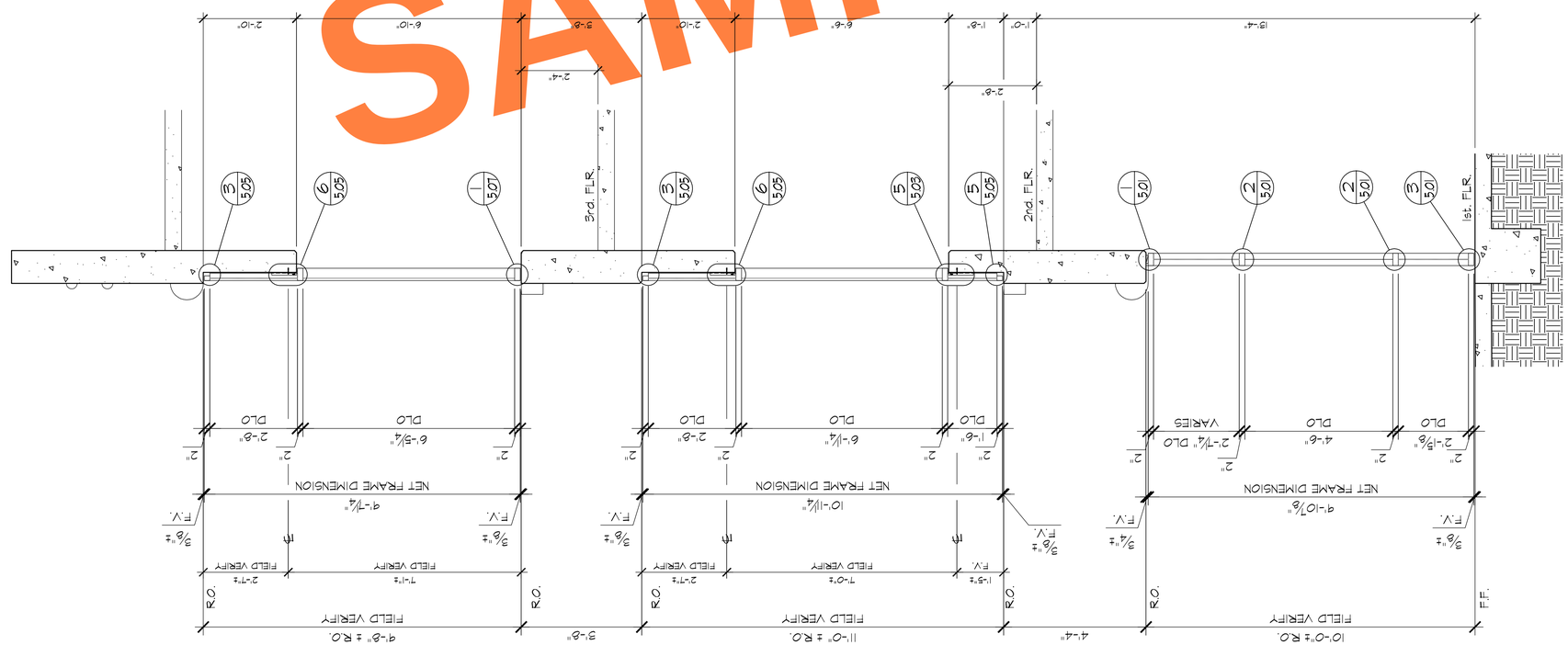

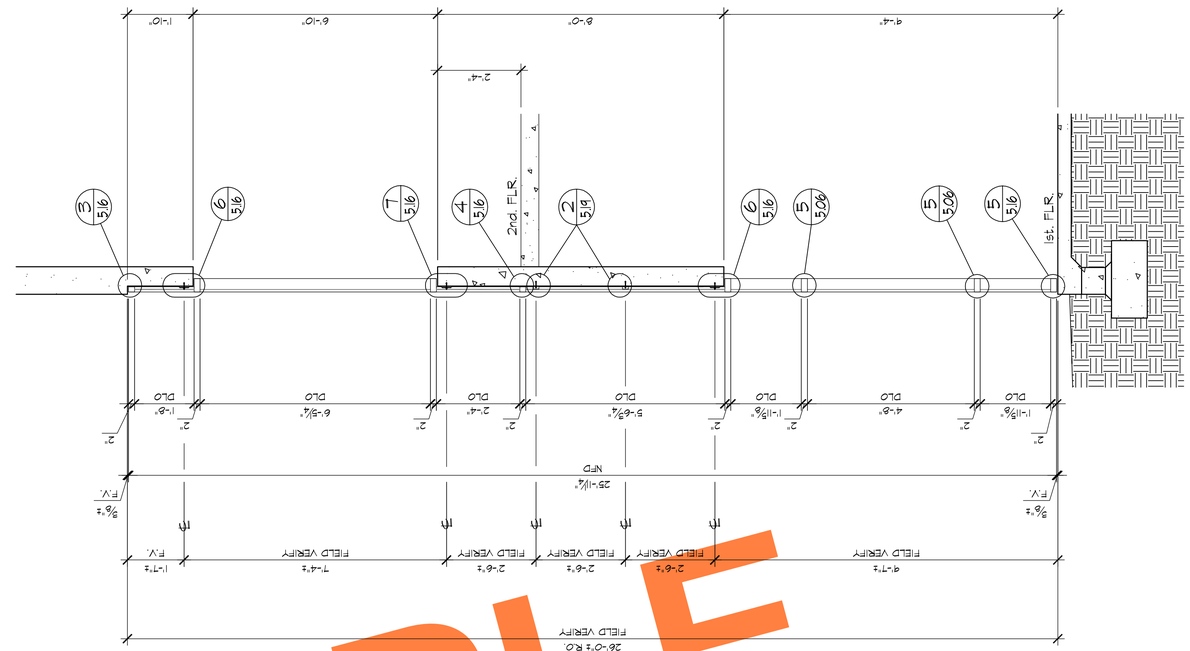

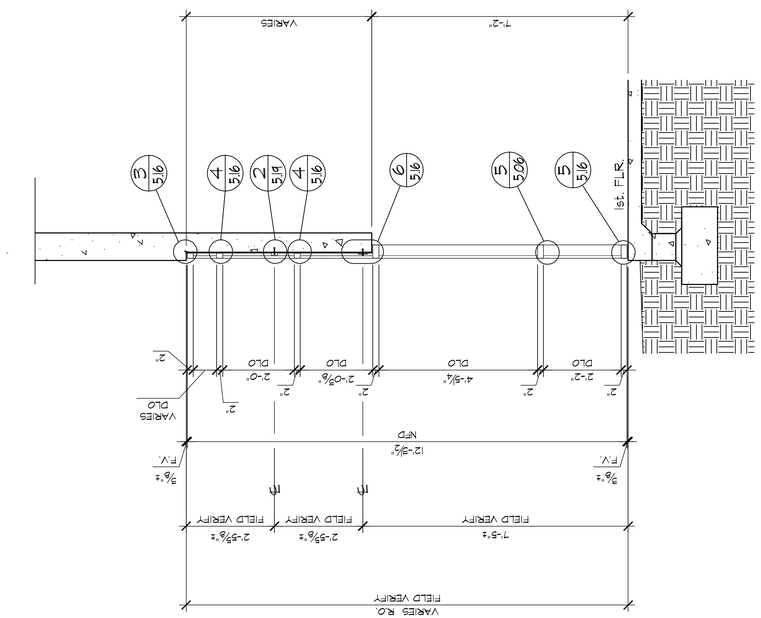

SAMPLE

REVISIONS	BY
△	
△	
△	
△	
△	

BMR
DRAFTING SERVICE
SINCE 1988
23846 SUNNYMEAD BLVD.
SUITE #6
MORENO VALLEY, CA 92553
B: (951) 243-7614
F: (951) 243-7673

GLASS FACTORY
26383 BASE LINE
HIGHLAND, CA 92346

JOB NAME: INLAND REGIONAL CENTER BTS
ARCHITECT: WARE MALCOMB
SHEET DESCRIPTION: WALL SECTIONS

DATE: 10-30-08
SCALE: 1/2"=1'-0"
DRAWN: MAC/BMR
JOB NO: 068-08
SHEET NO: 4.04

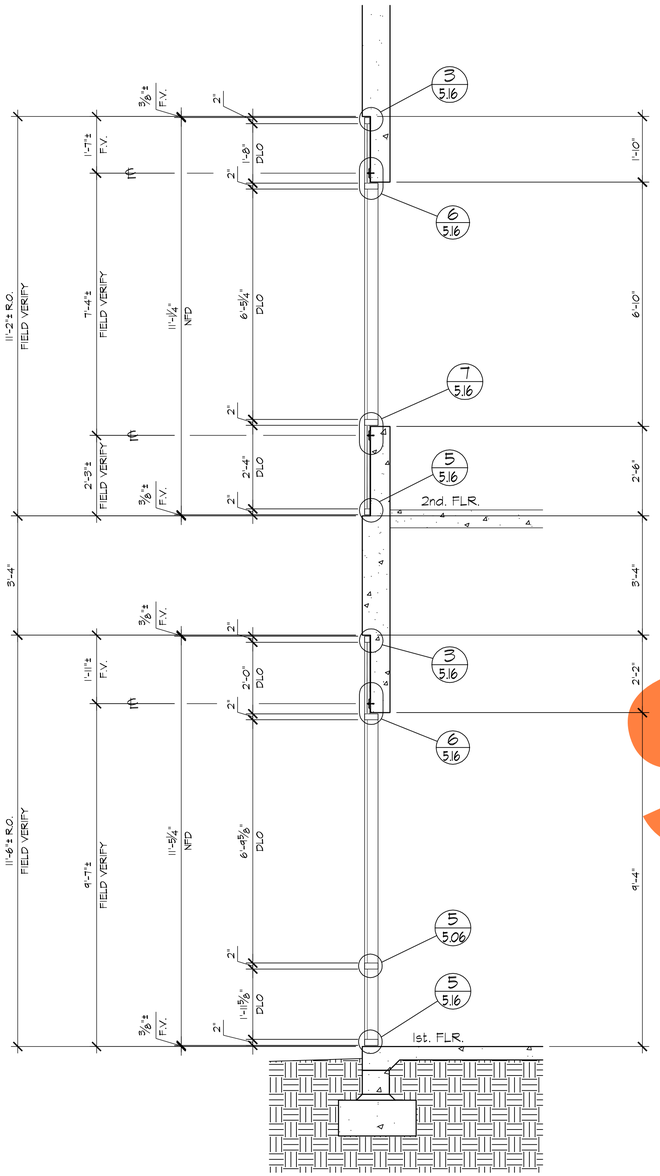

AA 4.05 WALL SECTION
ARCH'L: 3/A6.10

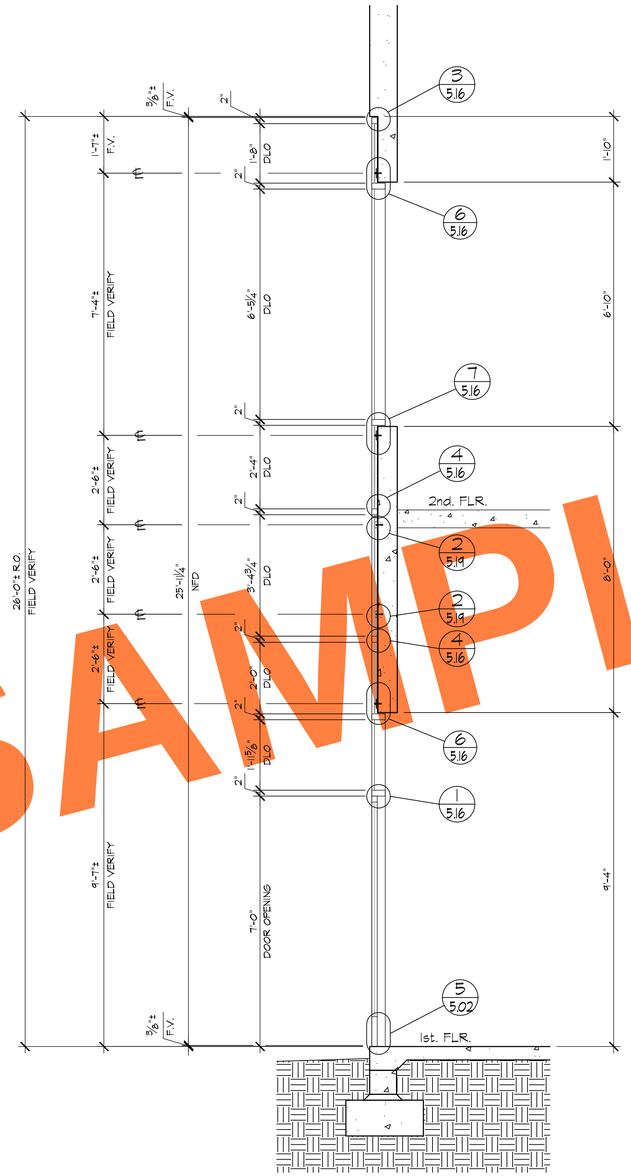

BB 4.05 WALL SECTION
ARCH'L: 2/A6.10

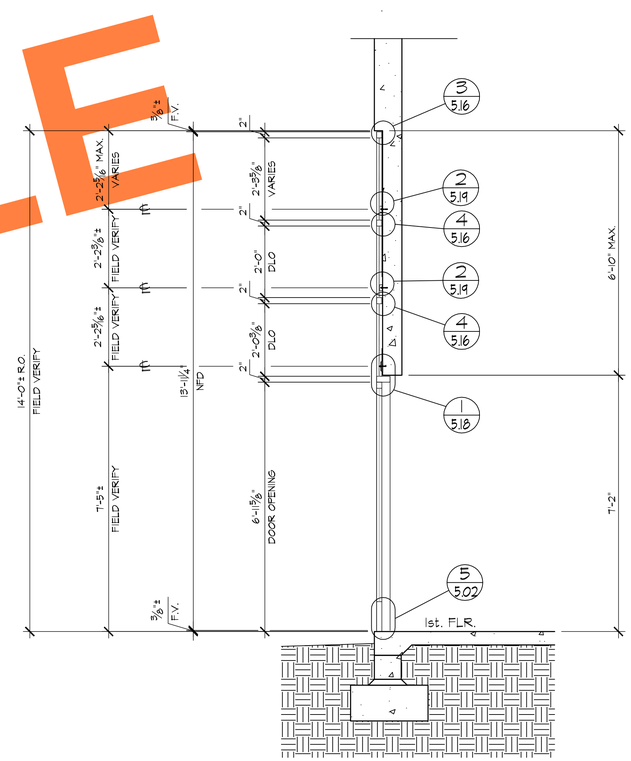

BB 4.05 WALL SECTION
ARCH'L: 2/A6.10

SAMPLE

REVISIONS	BY
△	
△	
△	
△	
△	

BMR
DRAFTING SERVICE
SINCE 1988
23846 SUNNYMEAD BLVD.
SUITE #6
MORENO VALLEY, CA 92553
B: (951) 243-7614
F: (951) 243-7673

GLASS FACTORY
26383 BASE LINE
HIGHLAND, CA 92346

JOB NAME: INLAND REGIONAL CENTER BTS
ARCHITECT: WARE MALCOMB
SHEET DESCRIPTION: WALL SECTIONS

DATE: 10-30-08
SCALE: 1/2"=1'-0"
DRAWN: MAC/BMR
JOB NO: 068-08
SHEET NO: 4.05

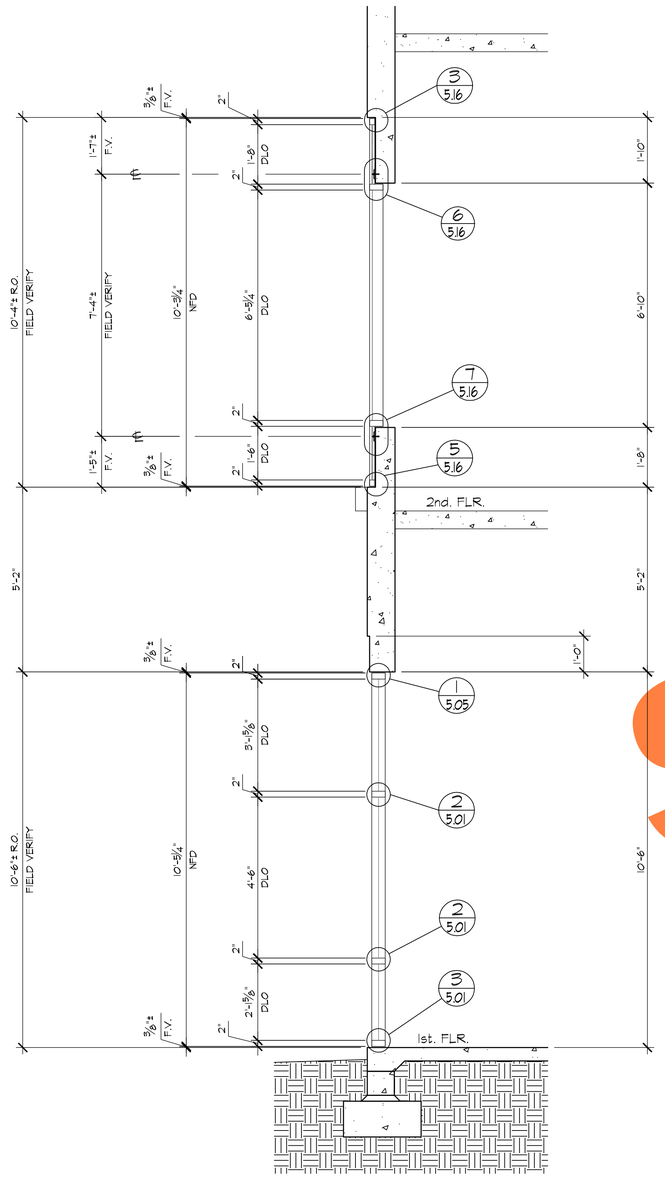

AA 4.06 WALL SECTION
ARCH'L: 3/A6.12

SAMPLE

REVISIONS	BY
△	
△	
△	
△	
△	

BMR
DRAFTING SERVICE
SINCE 1988
23846 SUNNYMEAD BLVD.
SUITE #6
MORENO VALLEY, CA 92553
B: (951) 243-7614
F: (951) 243-7673

GLASS FACTORY
26383 BASE LINE
HIGHLAND, CA 92346

JOB NAME: INLAND REGIONAL CENTER BTS
ARCHITECT: WARE MALCOMB
SHEET DESCRIPTION: WALL SECTIONS

DATE: 10-30-08
SCALE: 1/2"=1'-0"
DRAWN: MAC/BMR
JOB NO: 068-08
SHEET NO: 4.06

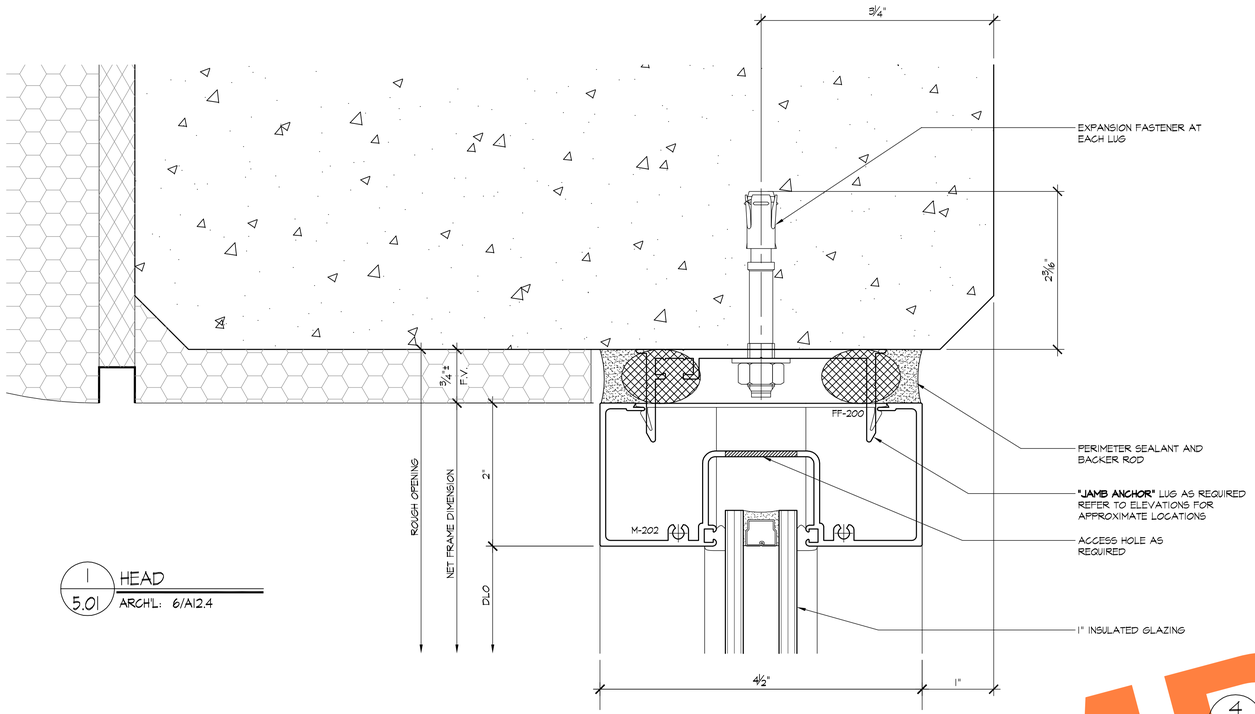

1 / 5.01 HEAD
ARCH'L: 6/A12.4

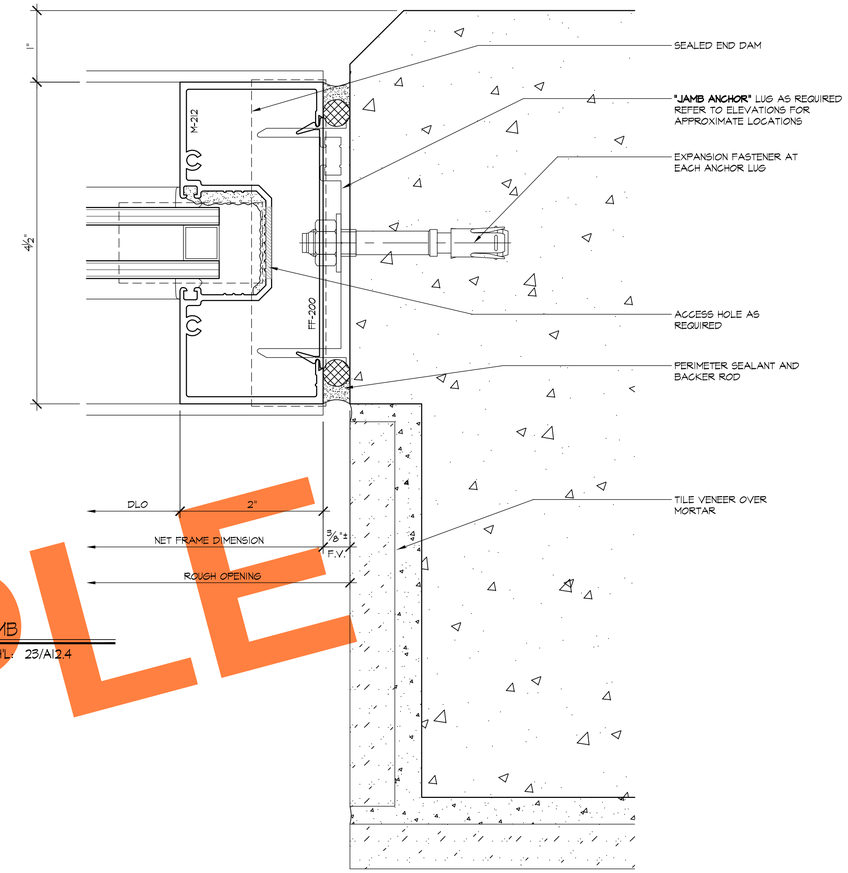

4 / 5.01 JAMB
ARCH'L: 23/A12.4

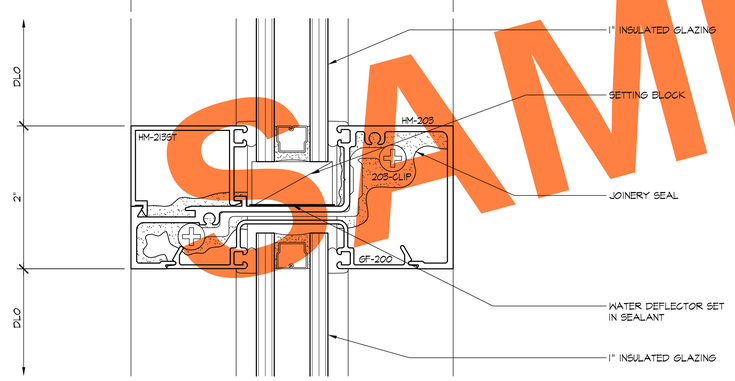

2 / 5.01 HORIZONTAL
ARCH'L: 8/A12.4

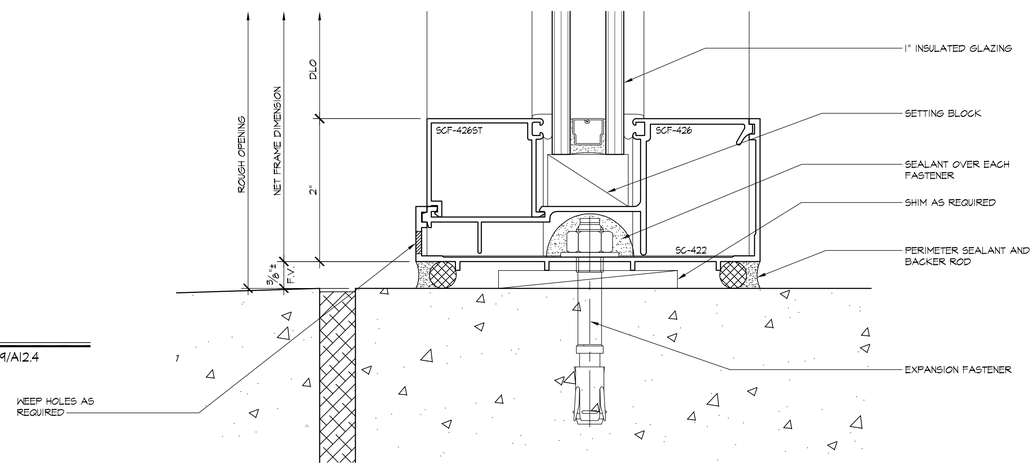

3 / 5.01 SILL
ARCH'L: 9/A12.4

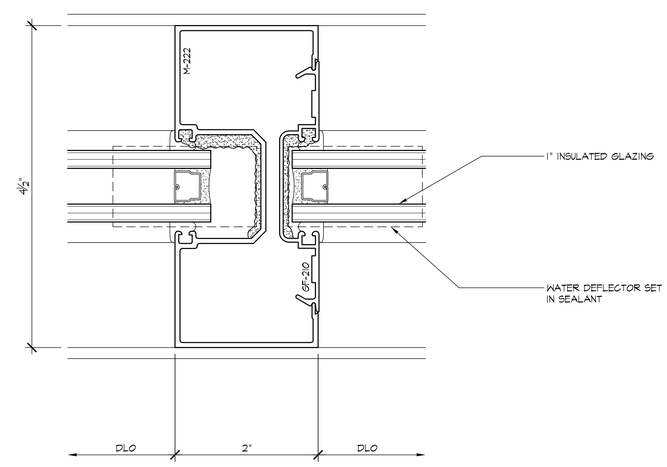

5 / 5.01 VERTICAL
ARCH'L: 8/A12.4

SAMPLE

REVISIONS	BY
△	
△	
△	
△	
△	

BMR
DRAFTING SERVICE
SINCE 1988
23846 SUNNYMEAD BLVD.
SUITE #6
MORENO VALLEY, CA 92553
B: (951) 243-7614
F: (951) 243-7673

GLASS FACTORY
26383 BASE LINE
HIGHLAND, CA 92346

JOB NAME: INLAND REGIONAL CENTER BTS
ARCHITECT: WARE MALCOMB
SHEET DESCRIPTION: DETAILS

DATE: 10-30-08
SCALE: FULL
DRAWN: MAC/BMR
JOB NO: 068-08
SHEET NO: 5.01

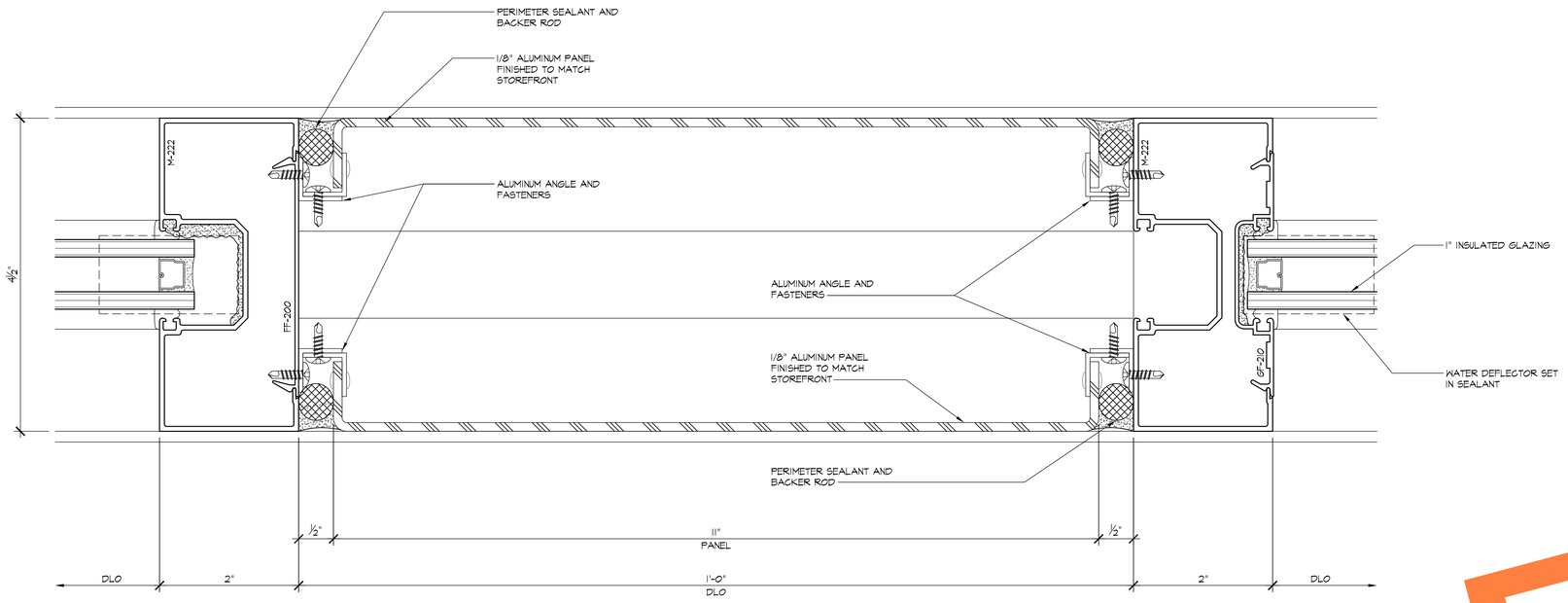

1 / 502 DOUBLE VERTICAL
ARCH'L: 4/A12.4a

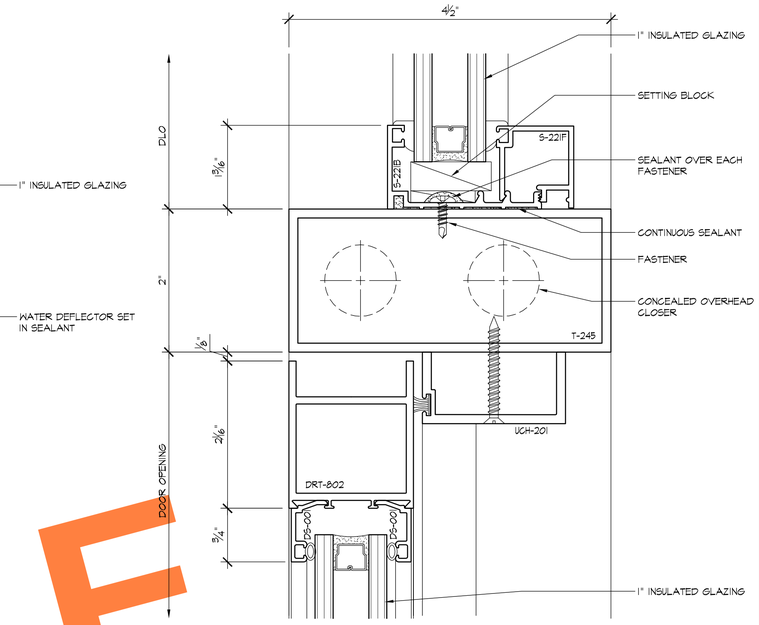

4 / 502 DOOR HEAD
ARCH'L: 2/A12.4

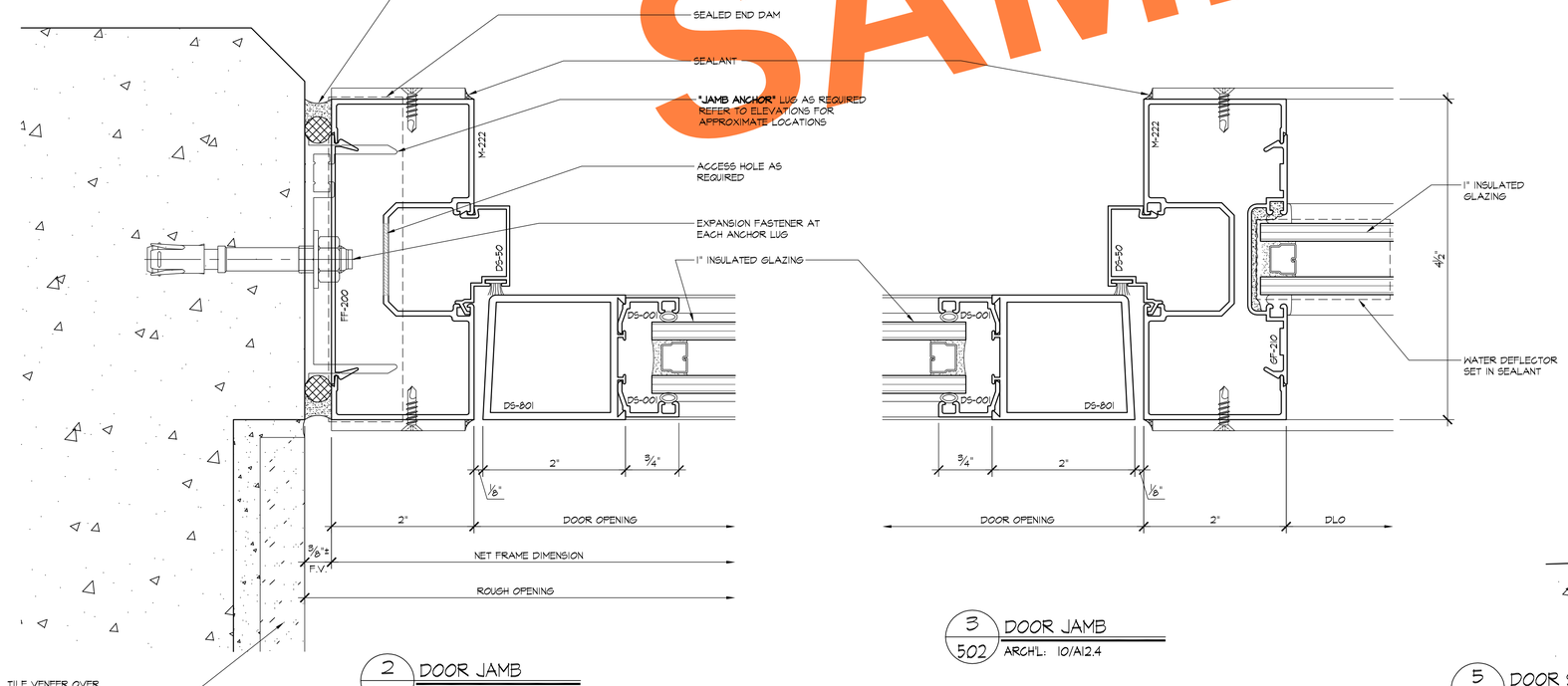

2 / 502 DOOR JAMB
ARCH'L: 24/A12.4
4/A12.4 SIM.

3 / 502 DOOR JAMB
ARCH'L: 10/A12.4

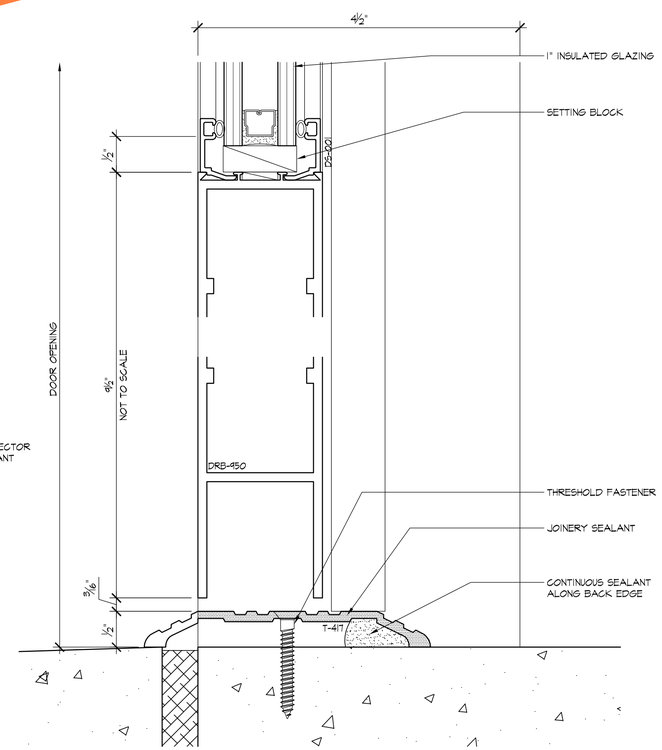

5 / 502 DOOR SILL
ARCH'L: 2/A12.4

SAMPLE

REVISIONS	BY
△	
△	
△	
△	
△	

BMR
DRAFTING SERVICE
SINCE 1988
23846 SUNNYMEAD BLVD.
SUITE #6
MORENO VALLEY, CA 92553
B: (951) 243-7614
F: (951) 243-7673

GLASS FACTORY
26383 BASE LINE
HIGHLAND, CA 92346

JOB NAME: INLAND REGIONAL CENTER BTS
ARCHITECT: WARE MALCOMB
SHEET DESCRIPTION: DETAILS

DATE: 10-30-08
SCALE: FULL
DRAWN: MAC/BMR
JOB NO: 068-08
SHEET NO: 5.02

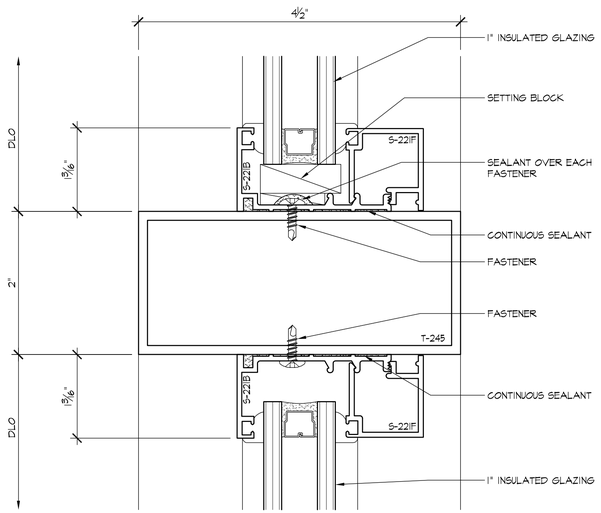

1 / 503 HORIZONTAL
ARCH'L: NONE

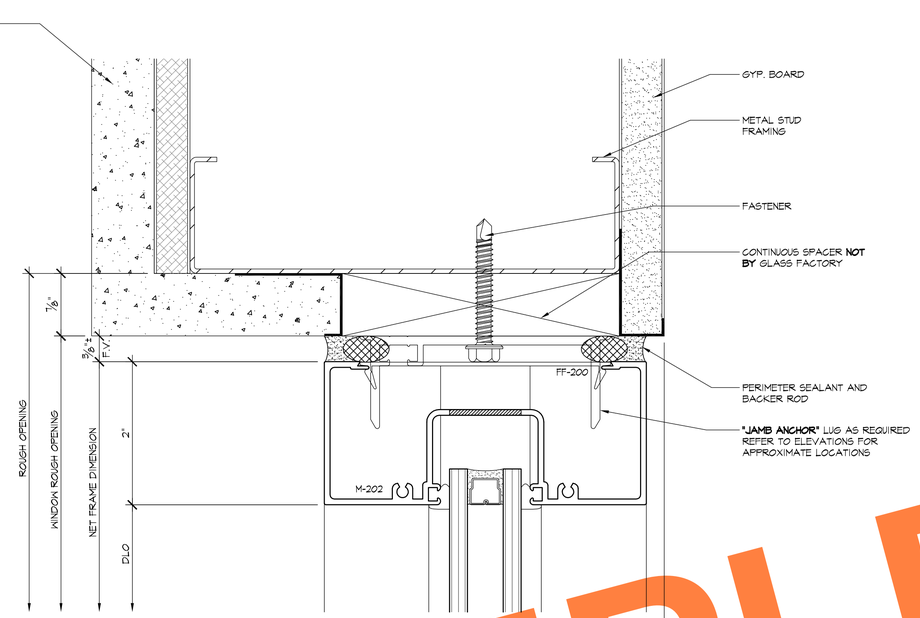

3 / 5.03 HEAD
ARCH'L: 1/A12.4a

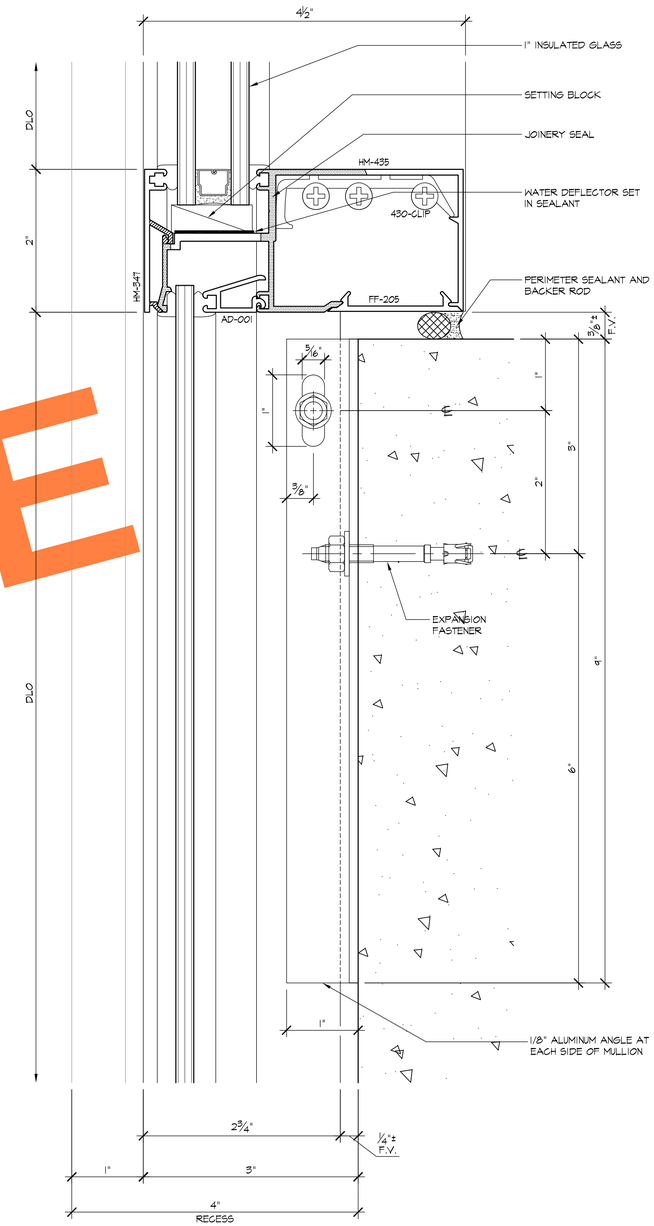

5 / 503 HORIZONTAL
ARCH'L: 19/A12.4

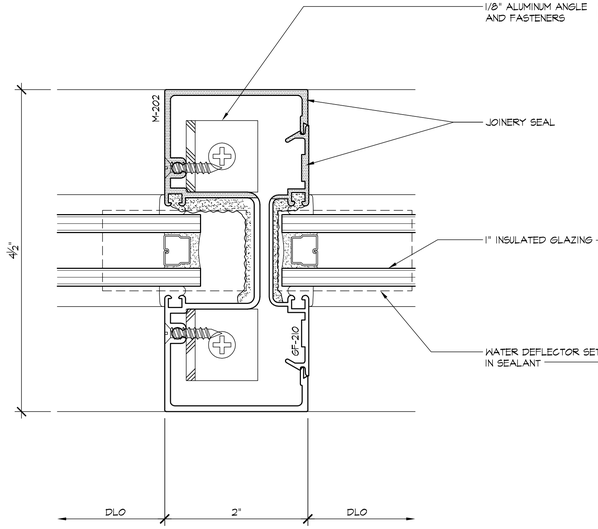

2 / 503 VERTICAL
ARCH'L: 8/A12.4 SIM.

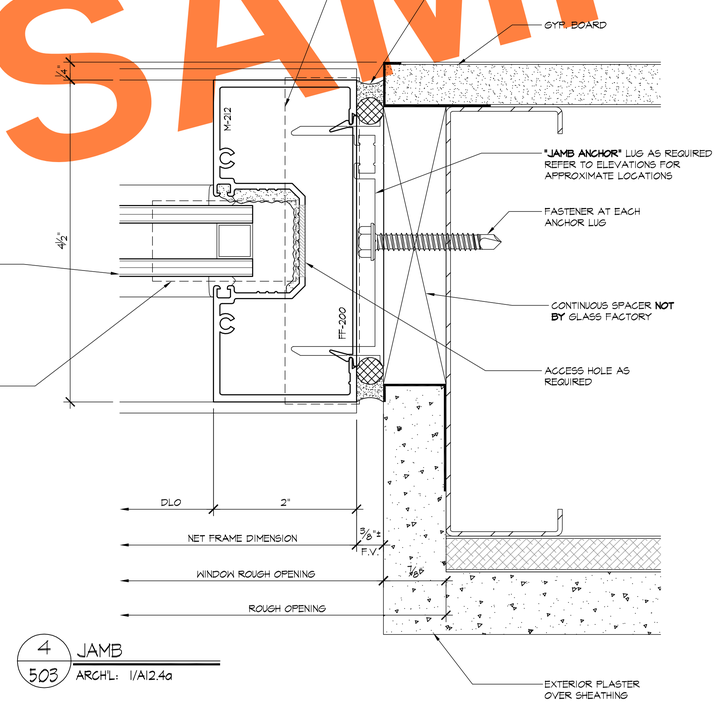

4 / 503 JAMB
ARCH'L: 1/A12.4a

SAMPLE

REVISIONS	BY
△	
△	
△	
△	
△	

BMR
DRAFTING SERVICE
SINCE 1988
23846 SUNNYMEAD BLVD.
SUITE #6
MORENO VALLEY, CA 92553
B: (951) 243-7614
F: (951) 243-7673

GLASS FACTORY
26383 BASE LINE
HIGHLAND, CA 92346

JOB NAME: INLAND REGIONAL CENTER BTS
ARCHITECT: WARE MALCOMB
SHEET DESCRIPTION: DETAILS

DATE: 10-30-08
SCALE: FULL
DRAWN: MAC/BMR
JOB NO: 068-08
SHEET NO: 5.03

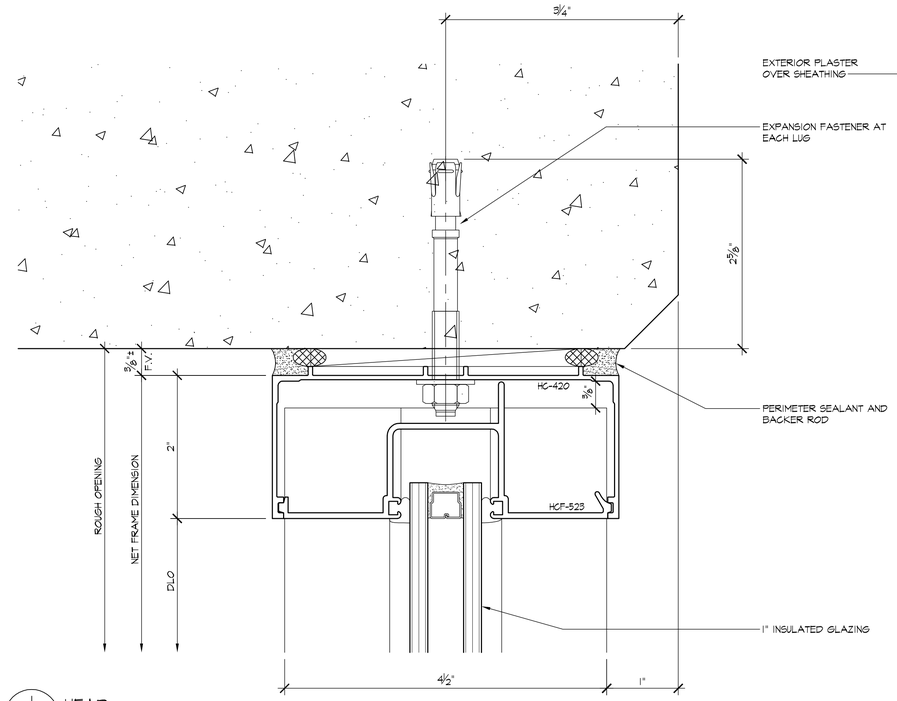

1 / 504 HEAD
ARCH'L: 2I/AI2.4

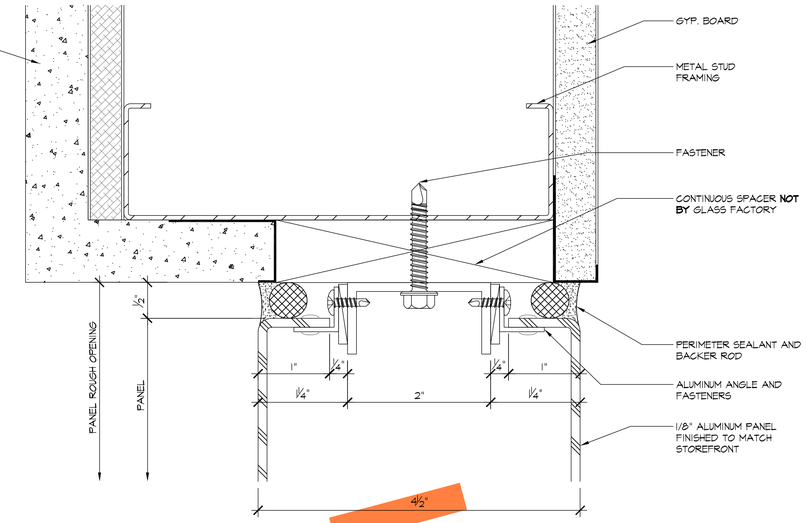

3 / 5.04 PANEL HEAD
ARCH'L: NONE

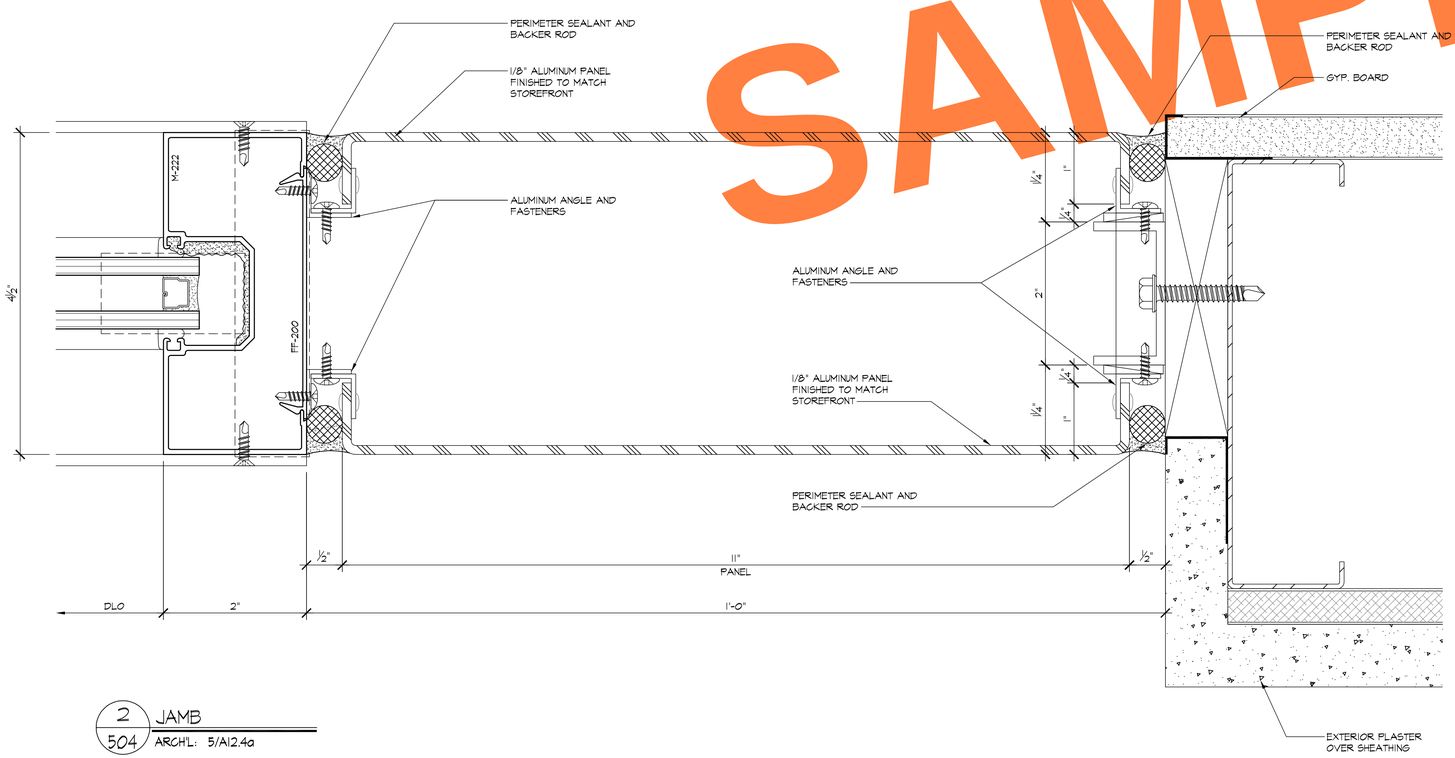

2 / 504 JAMB
ARCH'L: 5/AI2.4a

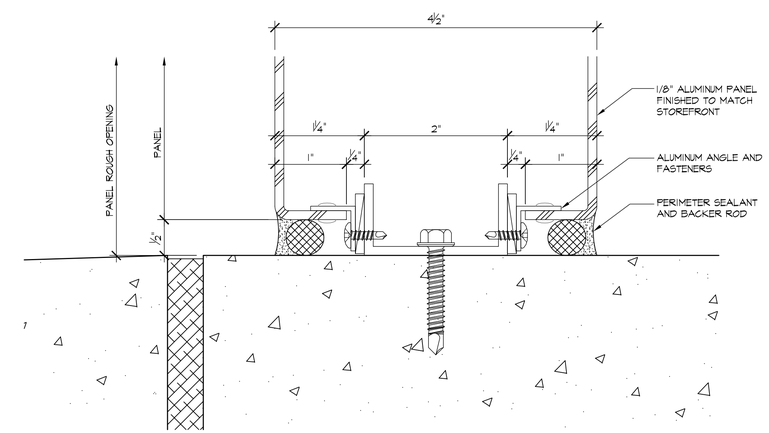

4 / 5.04 PANEL SILL
ARCH'L: NONE

SAMPLE

REVISIONS	BY
△	
△	
△	
△	
△	

BMR
DRAFTING SERVICE
SINCE 1988
23846 SUNNYMEAD BLVD.
SUITE #6
MORENO VALLEY, CA 92553
B: (951) 243-7614
F: (951) 243-7673

GLASS FACTORY
26383 BASE LINE
HIGHLAND, CA 92346

JOB NAME: INLAND REGIONAL CENTER BTS
ARCHITECT: WARE MALCOMB
SHEET DESCRIPTION: DETAILS

DATE: 10-30-08
SCALE: FULL
DRAWN: MAC/BMR
JOB NO: 068-08
SHEET NO: 5.04

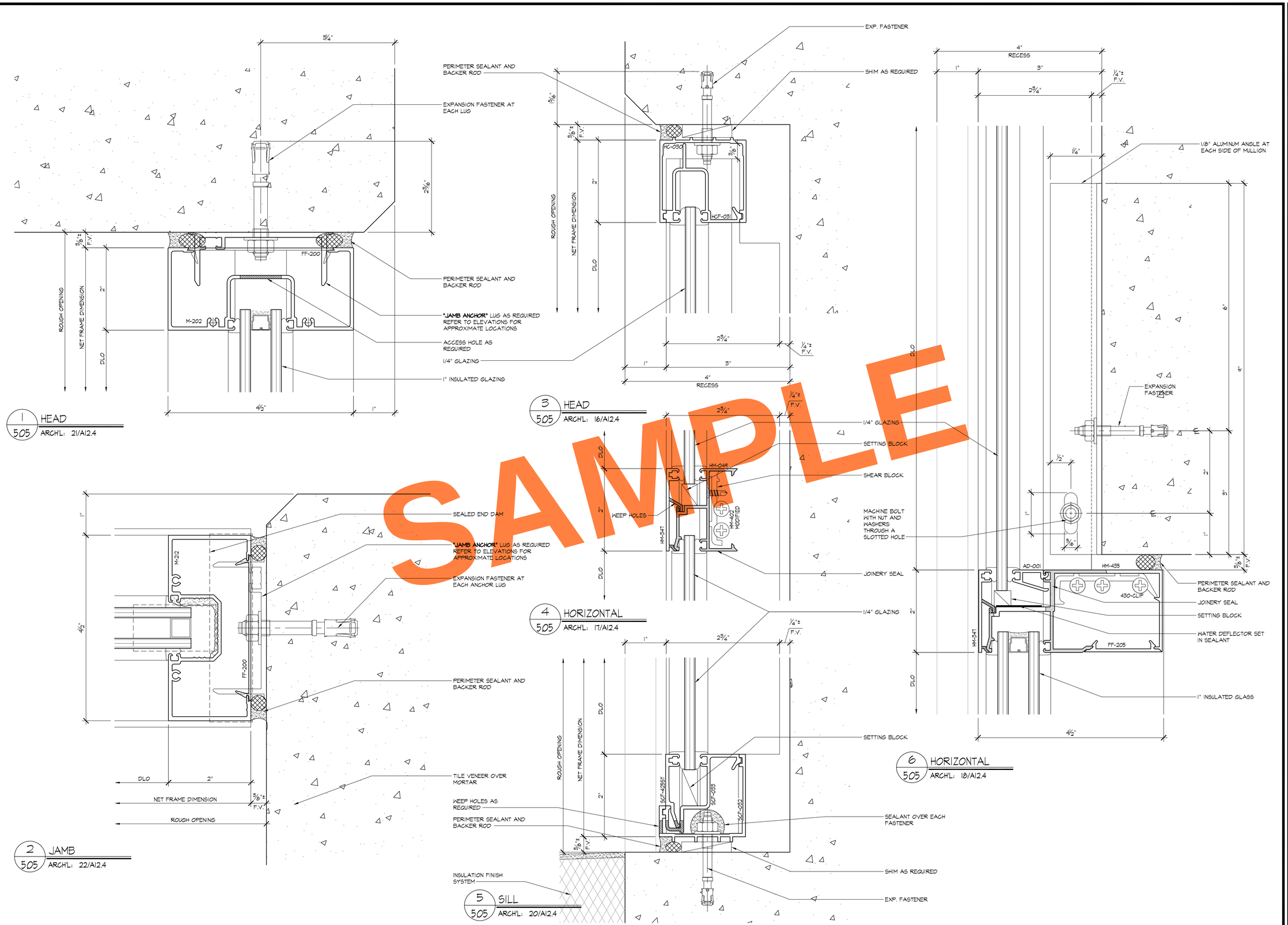

SAMPLE

REVISIONS	BY
△	
△	
△	
△	
△	

BMR
DRAFTING SERVICE
SINCE 1988
23846 SUNNYMEAD BLVD.
SUITE #6
MORENO VALLEY, CA 92553
B: (951) 243-7614
F: (951) 243-7673

GLASS FACTORY
26383 BASE LINE
HIGHLAND, CA 92346

JOB NAME: INLAND REGIONAL CENTER BTS
ARCHITECT: WARE MALCOMB
SHEET DESCRIPTION: DETAILS

DATE: 10-30-08
SCALE: FULL
DRAWN: MAC/BMR
JOB NO: 068-08
SHEET NO: 5.05

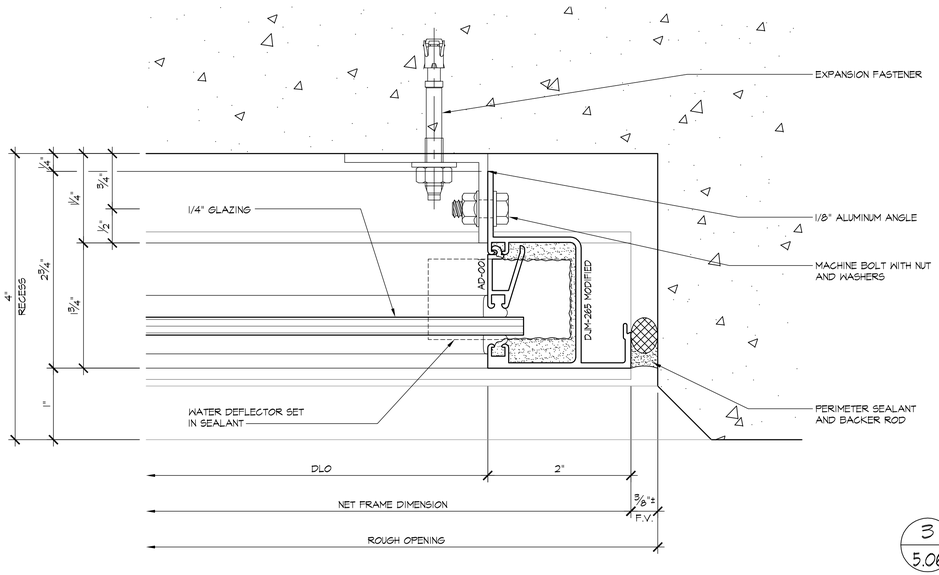

1 / 5.06 JAMB
ARCH'L: 16/A12.4

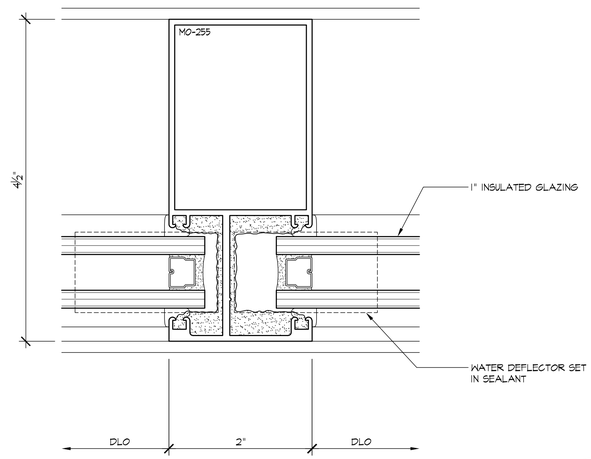

3 / 5.06 VERTICAL
ARCH'L: 14/A12.4

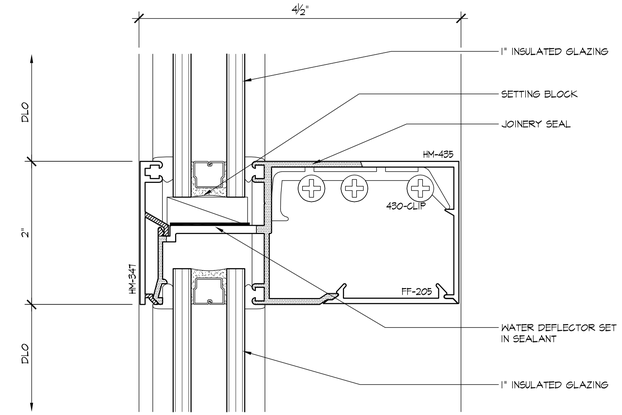

5 / 5.06 HORIZONTAL
ARCH'L: 14/A12.4

SAMPLE

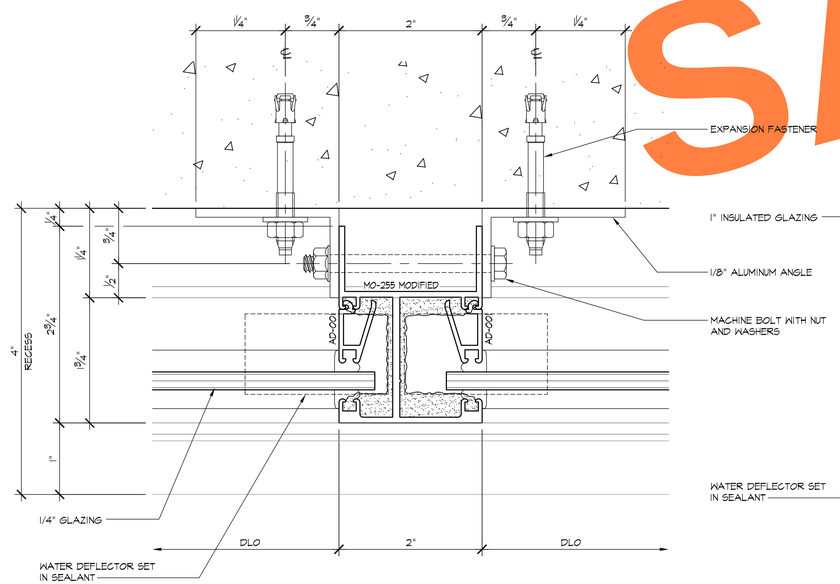

2 / 5.06 VERTICAL
ARCH'L: 17/A12.4

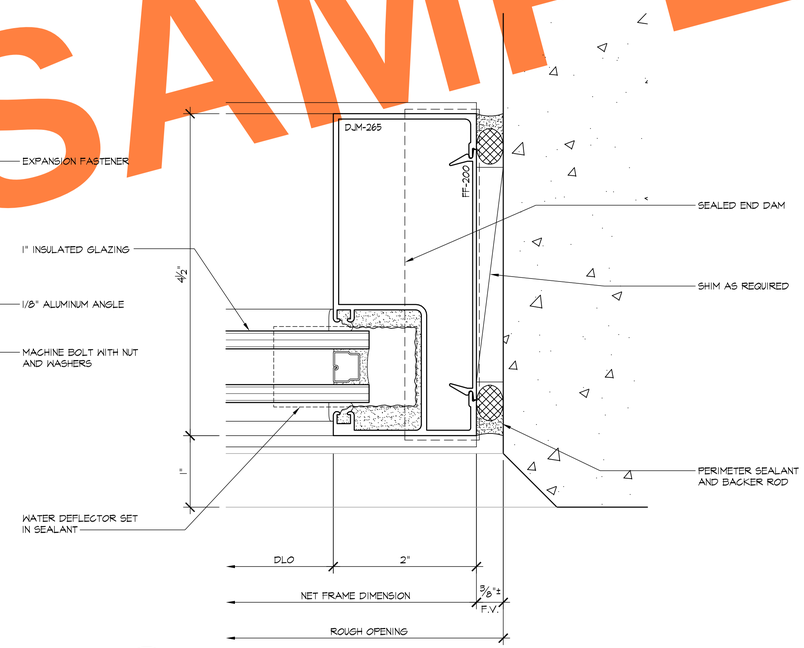

4 / 5.06 JAMB
ARCH'L: 23/A12.4 SIM.
24/A12.4 SIM.

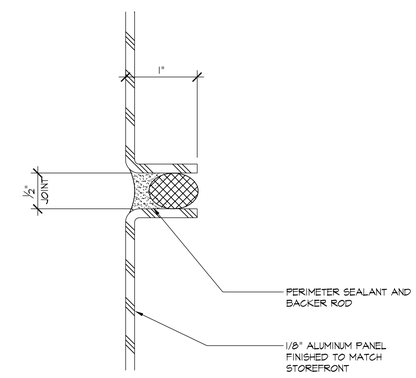

5 / 5.06 HORIZONTAL
ARCH'L: 14/A12.4

REVISIONS	BY
△	
△	
△	
△	
△	

BMR
DRAFTING SERVICE
SINCE 1988
23846 SUNNYMEAD BLVD.
SUITE #6
MORENO VALLEY, CA 92553
B: (951) 243-7614
F: (951) 243-7673

GLASS FACTORY
26383 BASE LINE
HIGHLAND, CA 92346

JOB NAME: INLAND REGIONAL CENTER BTS
ARCHITECT: WARE MALCOMB
SHEET DESCRIPTION: DETAILS

DATE: 10-30-08
SCALE: FULL
DRAWN: MAC/BMR
JOB NO: 068-08
SHEET NO: 5.06

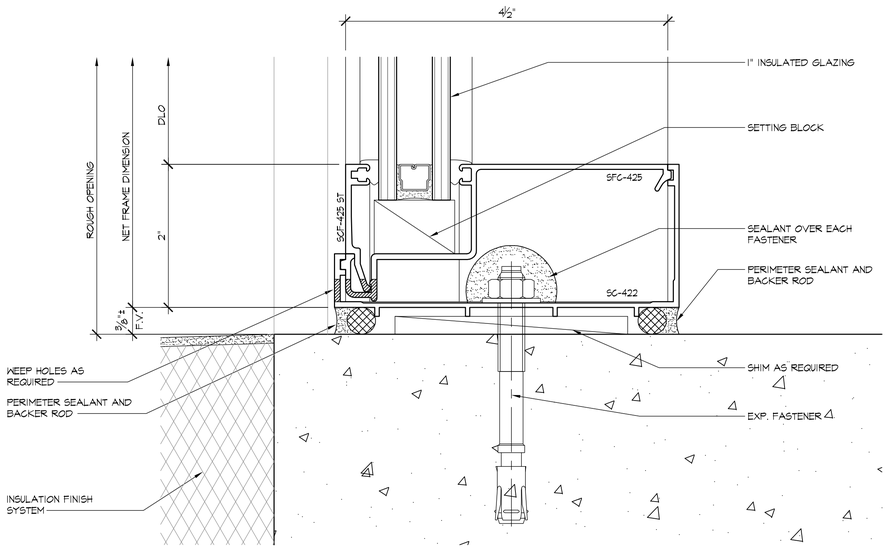

1 / 5.07 SILL
ARCH'L: NONE

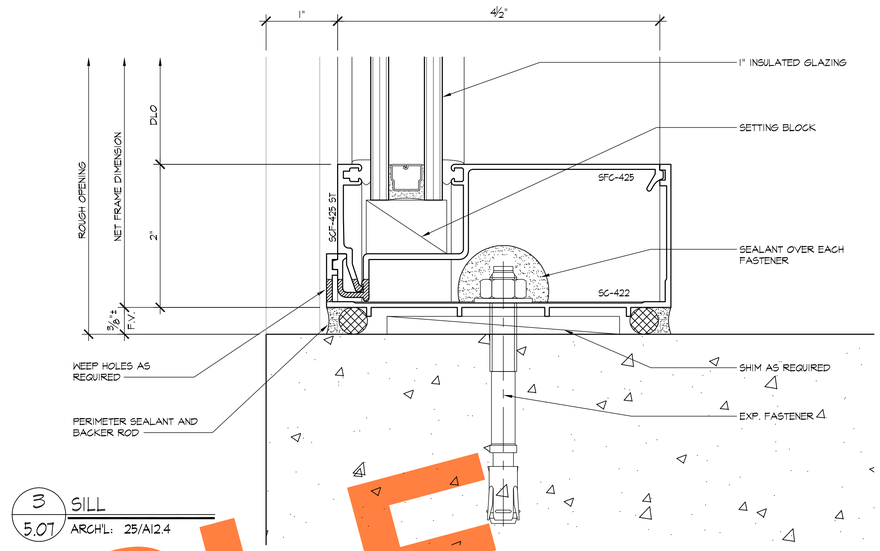

3 / 5.07 SILL
ARCH'L: 25/A12.4

SAMPLE

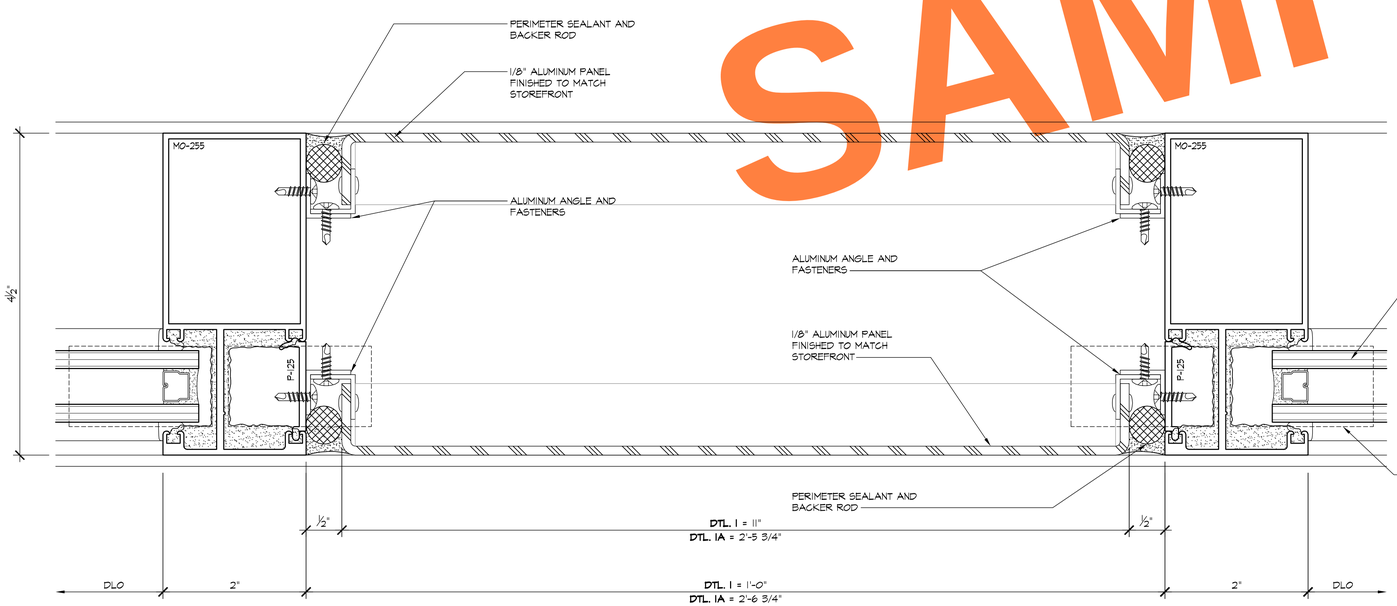

2 / 5.07 VERTICAL
ARCH'L: 4/A12.4a

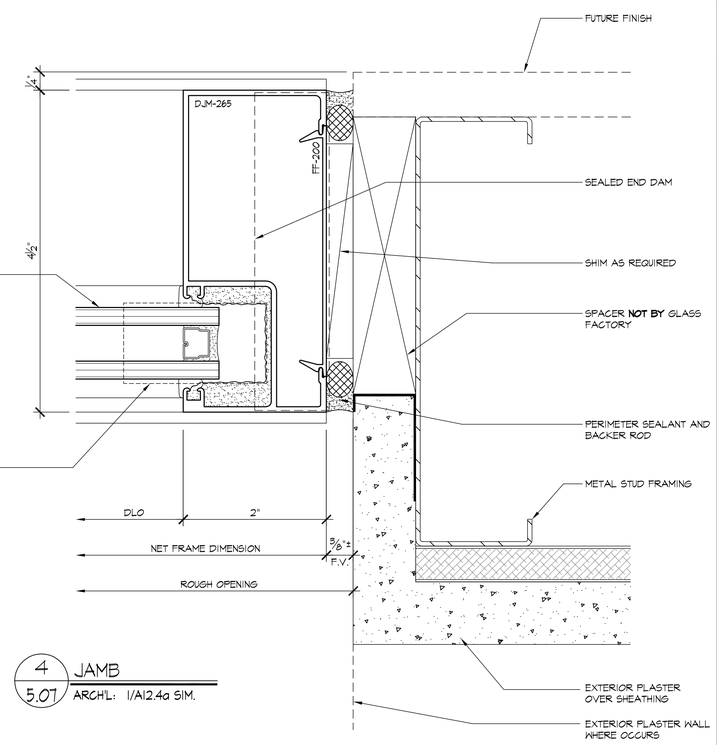

4 / 5.07 JAMB
ARCH'L: 1/A12.4a SIM.

REVISIONS	BY
△	
△	
△	
△	
△	

BMR
DRAFTING SERVICE
SINCE 1988
23846 SUNNYMEAD BLVD.
SUITE #6
MORENO VALLEY, CA 92553
B: (951) 243-7614
F: (951) 243-7673

GLASS FACTORY
26383 BASE LINE
HIGHLAND, CA 92346

JOB NAME: INLAND REGIONAL CENTER BTS
ARCHITECT: WARE MALCOMB
SHEET DESCRIPTION: DETAILS

DATE: 10-30-08
SCALE: FULL
DRAWN: MAC/BMR
JOB NO: 068-08
SHEET NO: 5.07

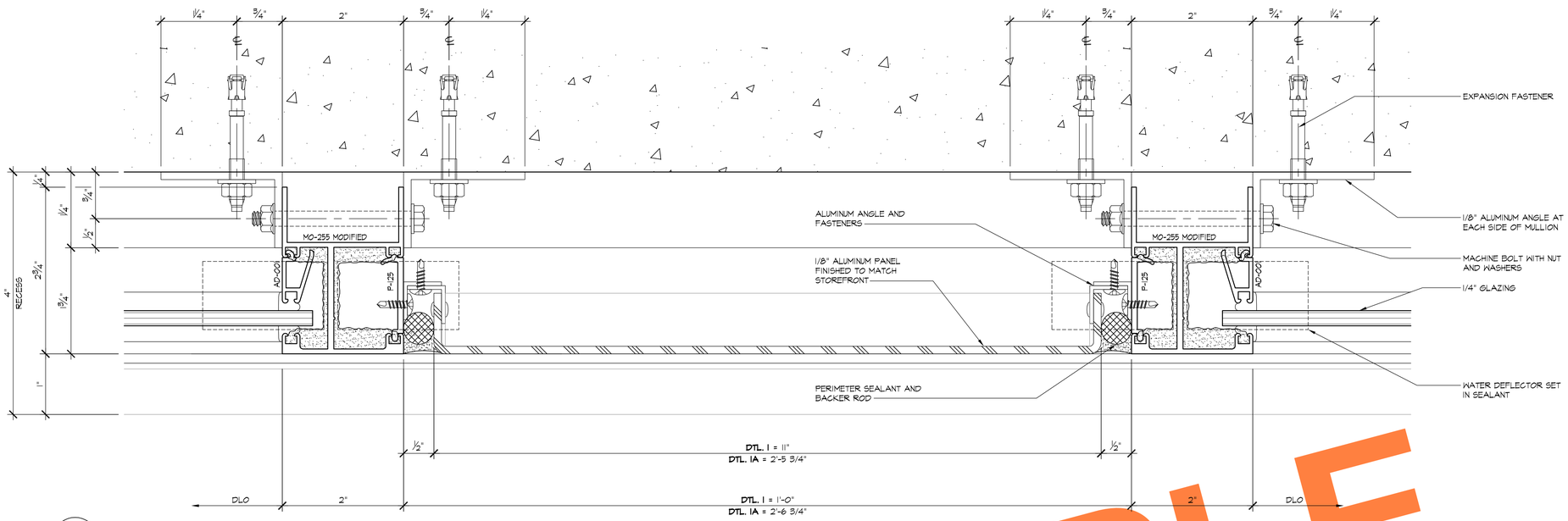

1 / 5.08 VERTICAL
ARCH'L: NONE

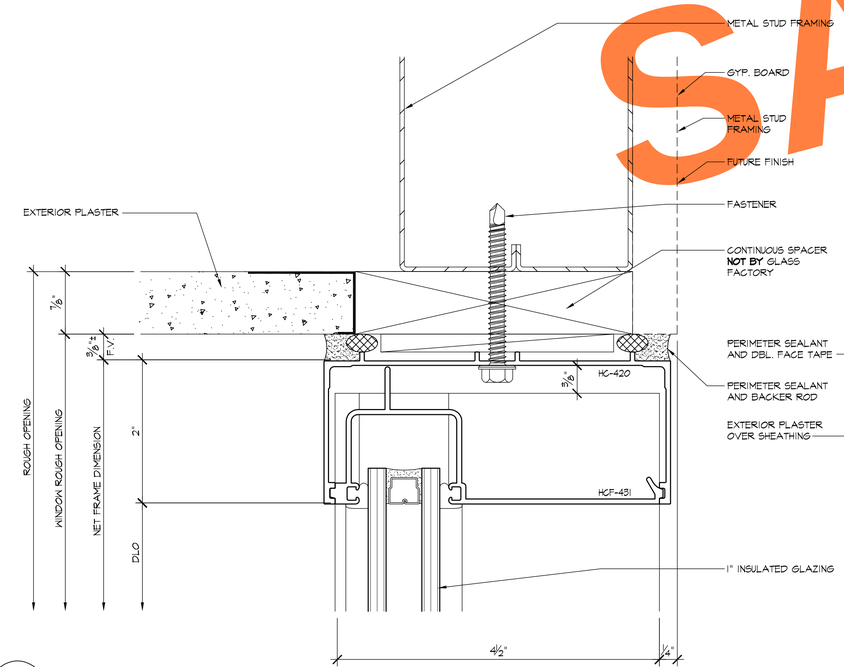

2 / 5.08 HEAD
ARCH'L: 1/A12.4a SIM.

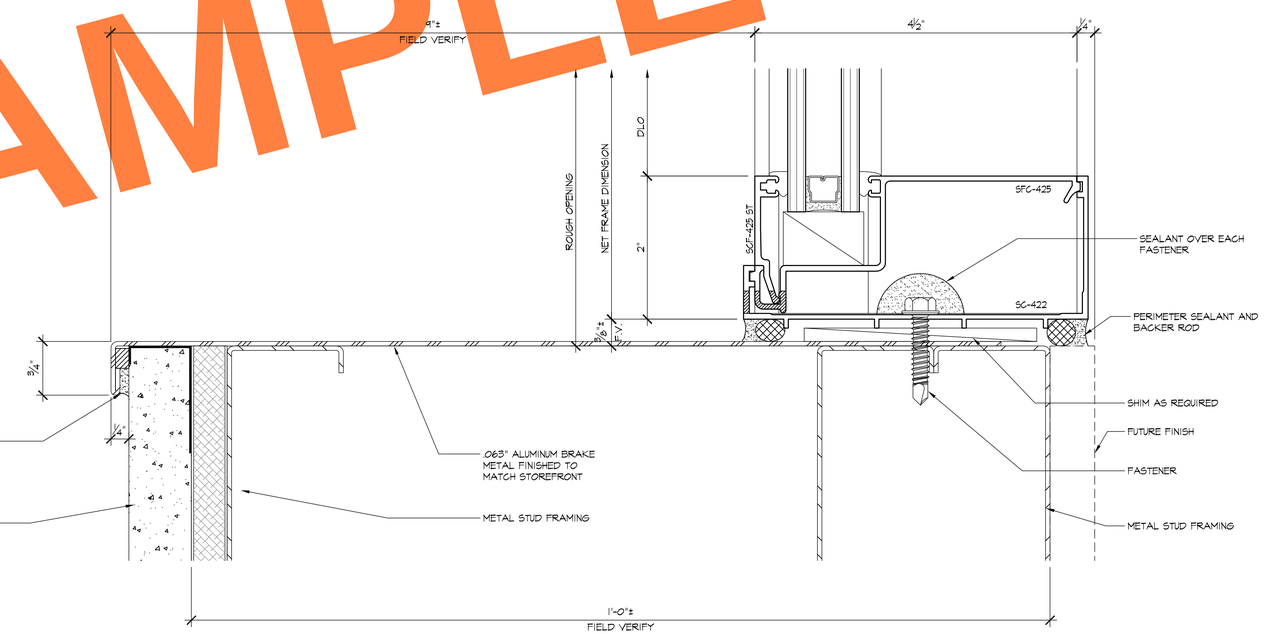

3 / 5.08 SILL
ARCH'L: 2/A12.4a SIM.

SAMPLE

REVISIONS	BY
△	
△	
△	
△	
△	

BMR
DRAFTING SERVICE
SINCE 1988
23846 SUNNYMEAD BLVD.
SUITE #6
MORENO VALLEY, CA 92553
B: (951) 243-7614
F: (951) 243-7673

GLASS FACTORY
26383 BASE LINE
HIGHLAND, CA 92346

JOB NAME: INLAND REGIONAL CENTER BTS
ARCHITECT: WARE MALCOMB
SHEET DESCRIPTION: DETAILS

DATE: 10-30-08
SCALE: FULL
DRAWN: MAC/BMR
JOB NO: 068-08
SHEET NO: 5.08

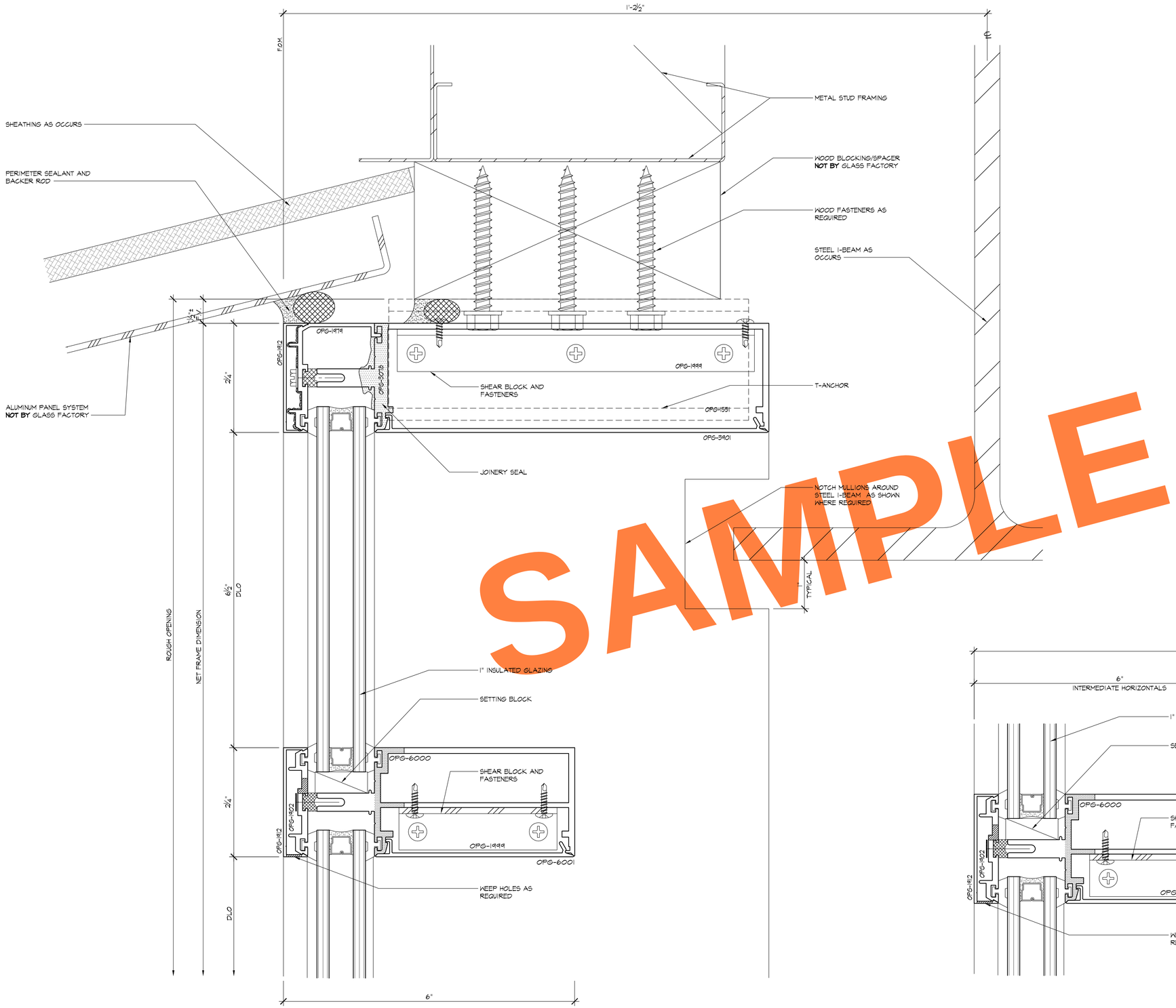

1 / 509 HEAD
ARCH'L: 4/A12.2a SIM.

2 / 509 HORIZONTAL
ARCH'L: 14/A12.4

REVISIONS	BY
△	
△	
△	
△	
△	

BMR
DRAFTING SERVICE
SINCE 1988
23846 SUNNYMEAD BLVD.
SUITE #6
MORENO VALLEY, CA 92553
B: (951) 243-7614
F: (951) 243-7673

GLASS FACTORY
26383 BASE LINE
HIGHLAND, CA 92346

JOB NAME: INLAND REGIONAL CENTER BTS
ARCHITECT: WARE MALCOMB
SHEET DESCRIPTION: DETAILS

DATE: 10-30-08
SCALE: FULL
DRAWN: MAC/BMR
JOB NO: 068-08
SHEET NO: 5.09

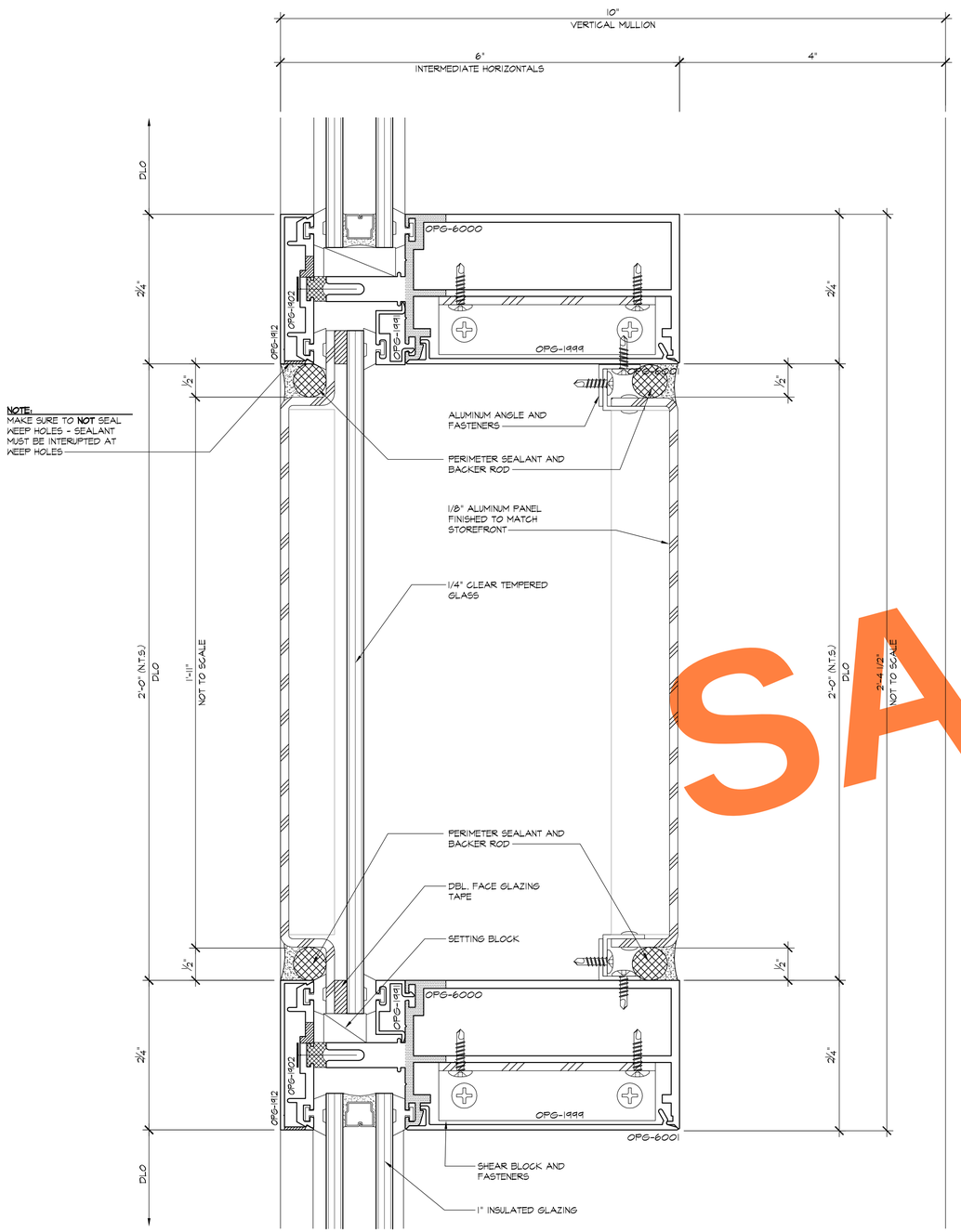

2 / 509 HORIZONTAL
ARCH'L: 14/A12.4

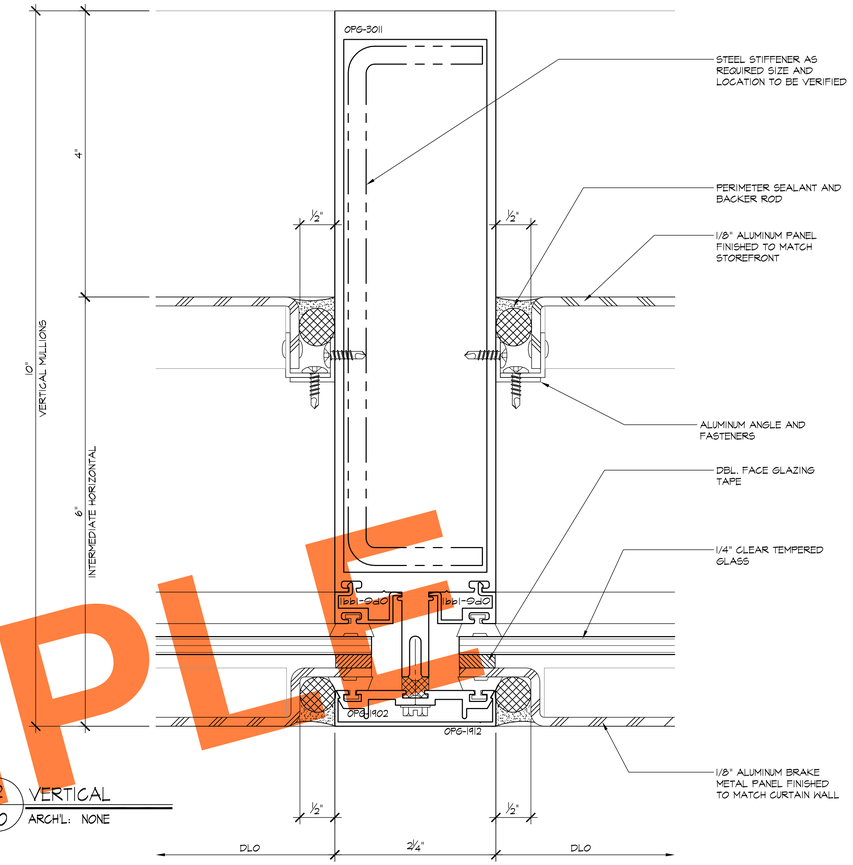

2 / 5.10 VERTICAL
ARCH'L: NONE

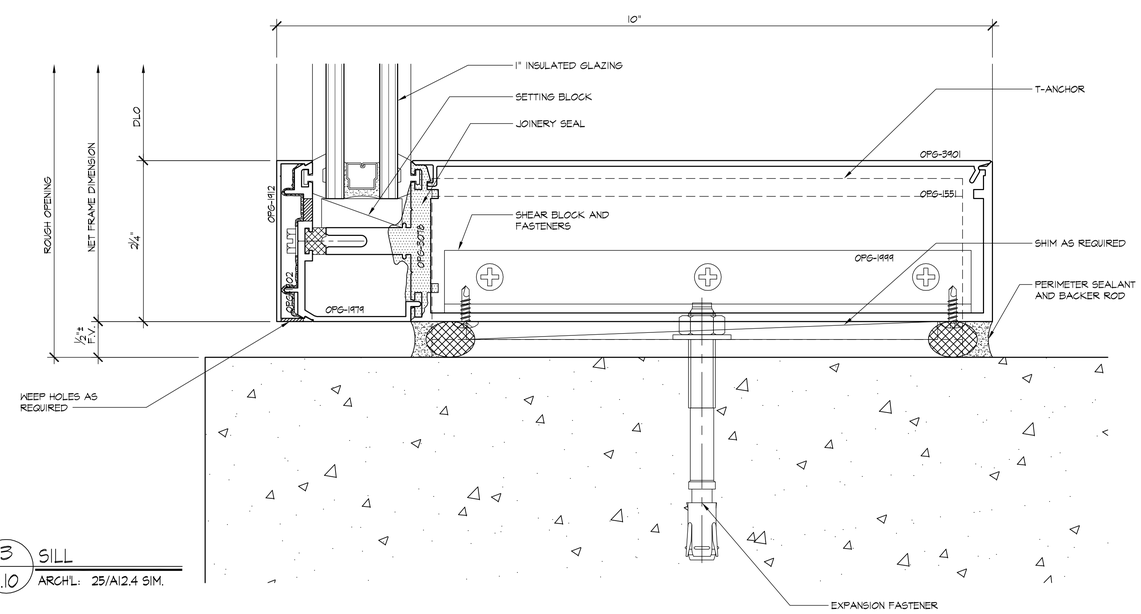

3 / 5.10 SILL
ARCH'L: 25/A12.4 SIM.

SAMPLE

REVISIONS	BY
△	
△	
△	
△	
△	

BMR
DRAFTING SERVICE
SINCE 1988
23846 SUNNYMEAD BLVD.
SUITE #6
MORENO VALLEY, CA 92553
B: (951) 243-7614
F: (951) 243-7673

GLASS FACTORY
26383 BASE LINE
HIGHLAND, CA 92346

JOB NAME: INLAND REGIONAL CENTER BTS
ARCHITECT: WARE MALCOMB
SHEET DESCRIPTION: DETAILS

DATE: 10-30-08
SCALE: FULL
DRAWN: MAC/BMR
JOB NO: 068-08
SHEET NO: 5.10

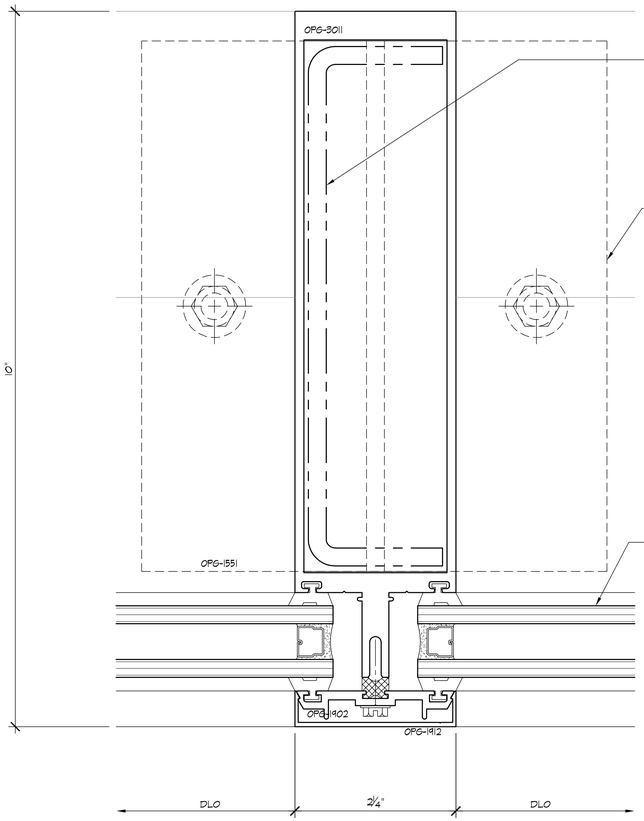

1 / 5.11 VERTICAL
ARCH'L: 14/A12.4

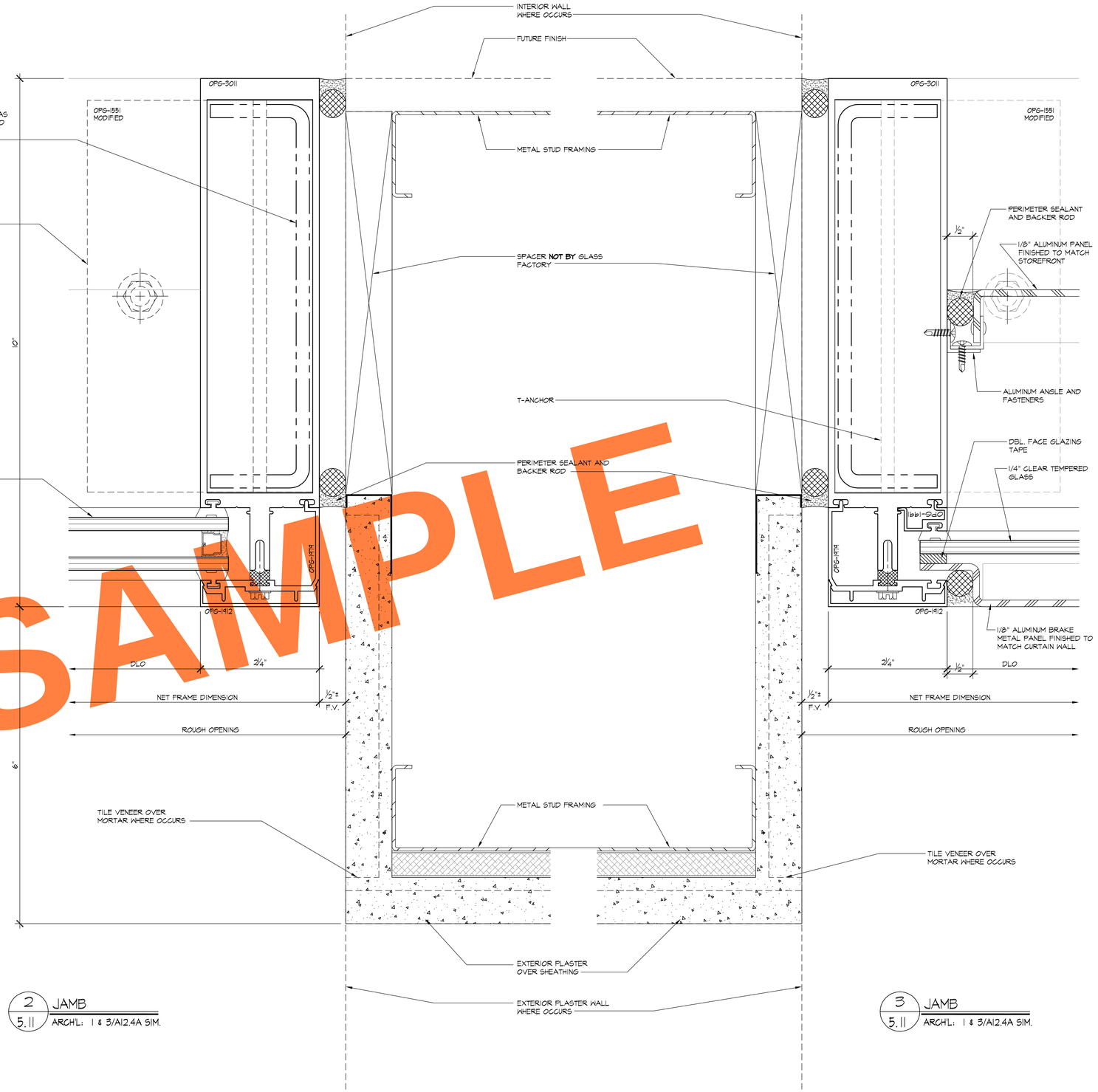

2 / 5.11 JAMB
ARCH'L: 1 & 3/A12.4A SIM.

3 / 5.11 JAMB
ARCH'L: 1 & 3/A12.4A SIM.

SAMPLE

REVISIONS	BY
△	
△	
△	
△	
△	

BMR
DRAFTING SERVICE
SINCE 1988
23846 SUNNYMEAD BLVD.
SUITE #6
MORENO VALLEY, CA 92553
B: (951) 243-7614
F: (951) 243-7673

GLASS FACTORY
26383 BASE LINE
HIGHLAND, CA 92346

JOB NAME: INLAND REGIONAL CENTER BTS
ARCHITECT: WARE MALCOMB
SHEET DESCRIPTION: DETAILS

DATE: 10-30-08
SCALE: FULL
DRAWN: MAC/BMR
JOB NO: 068-08
SHEET NO: 5.11

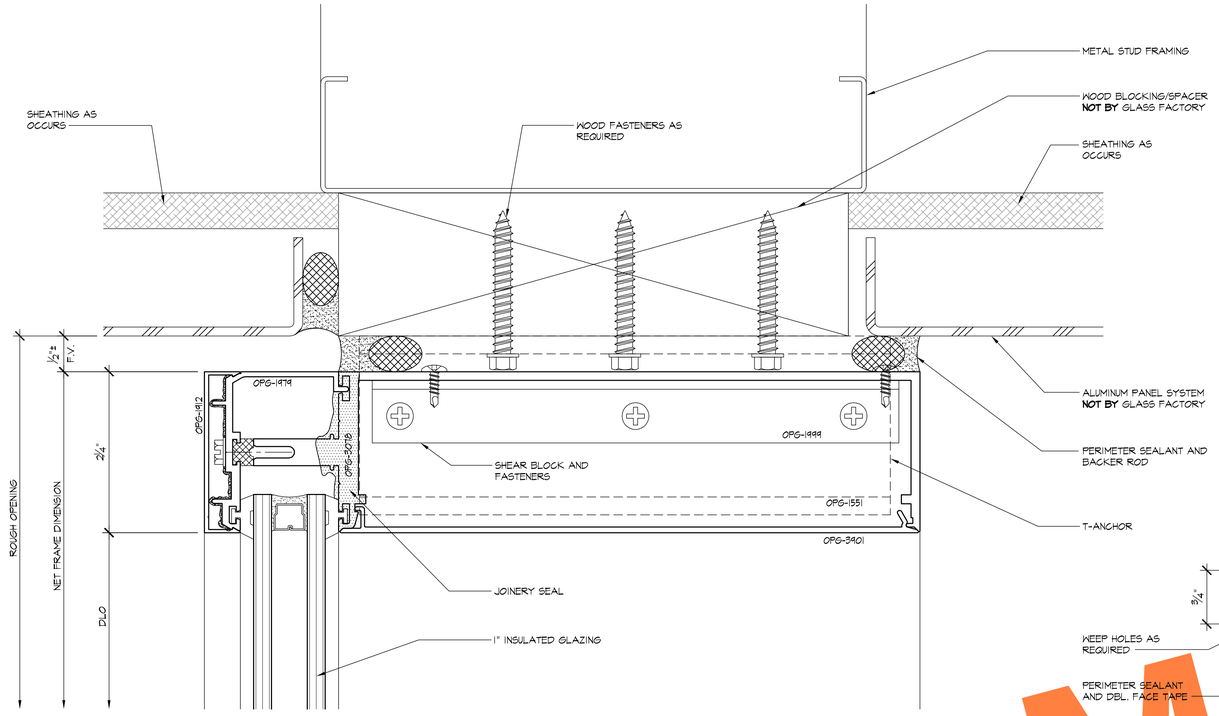

1 / 5.12 HEAD
ARCH'L: 2/A12.2a SIM.

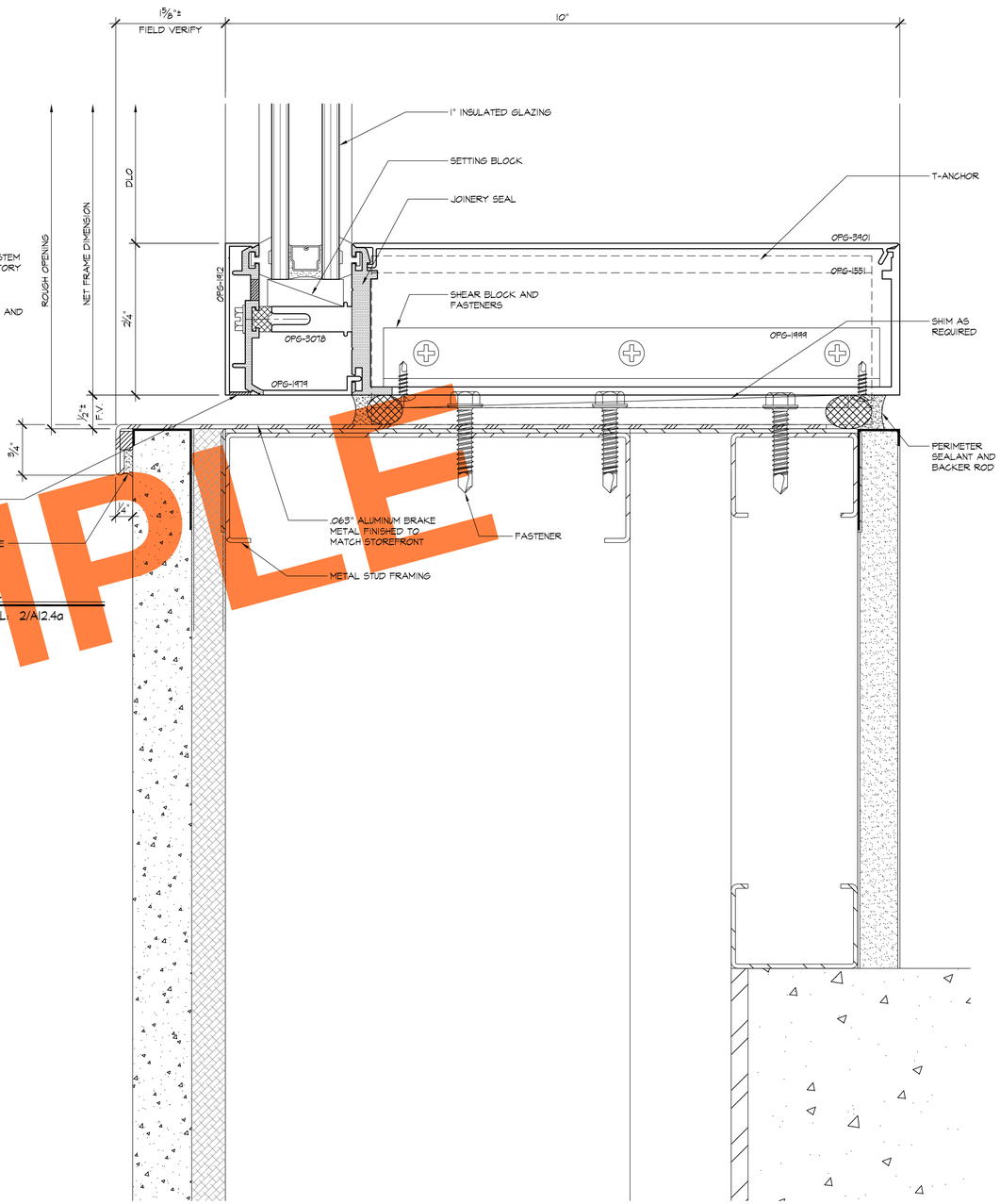

3 / 5.12 SILL
ARCH'L: 2/A12.4a

SAMPLE

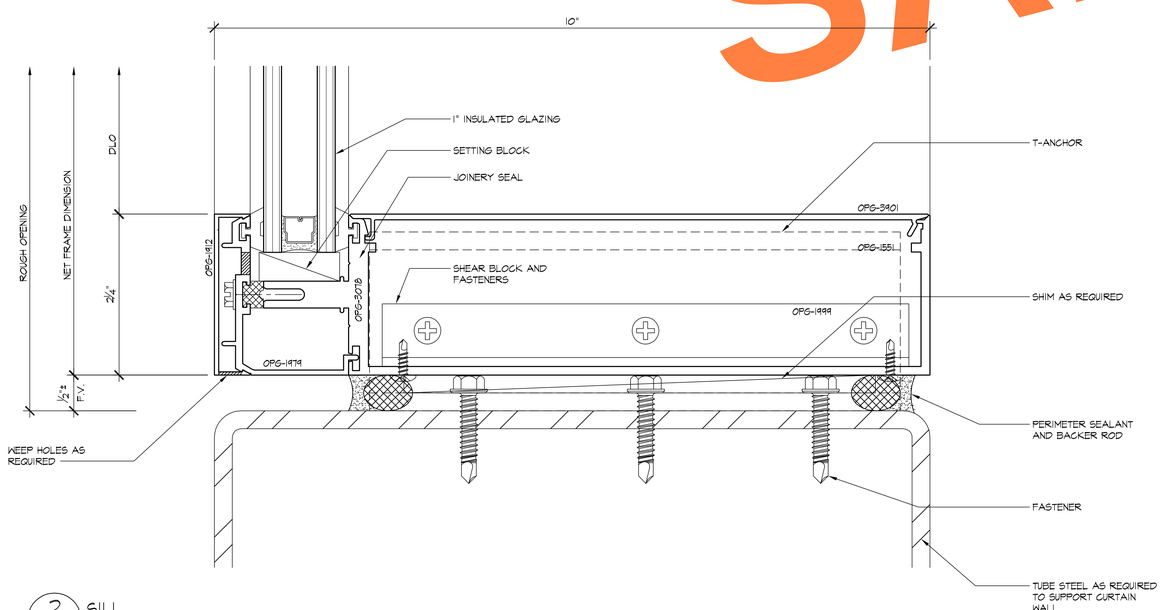

2 / 5.12 SILL
ARCH'L: NONE

REVISIONS	BY
△	
△	
△	
△	
△	

BMR
DRAFTING SERVICE
SINCE 1988
23846 SUNNYMEAD BLVD.
SUITE #6
MORENO VALLEY, CA 92553
B: (951) 243-7614
F: (951) 243-7673

GLASS FACTORY
26383 BASE LINE
HIGHLAND, CA 92346

JOB NAME: INLAND REGIONAL CENTER BTS
ARCHITECT: WARE MALCOMB
SHEET DESCRIPTION: DETAILS

DATE: 10-30-08
SCALE: FULL
DRAWN: MAC/BMR
JOB NO: 068-08
SHEET NO: 5.12

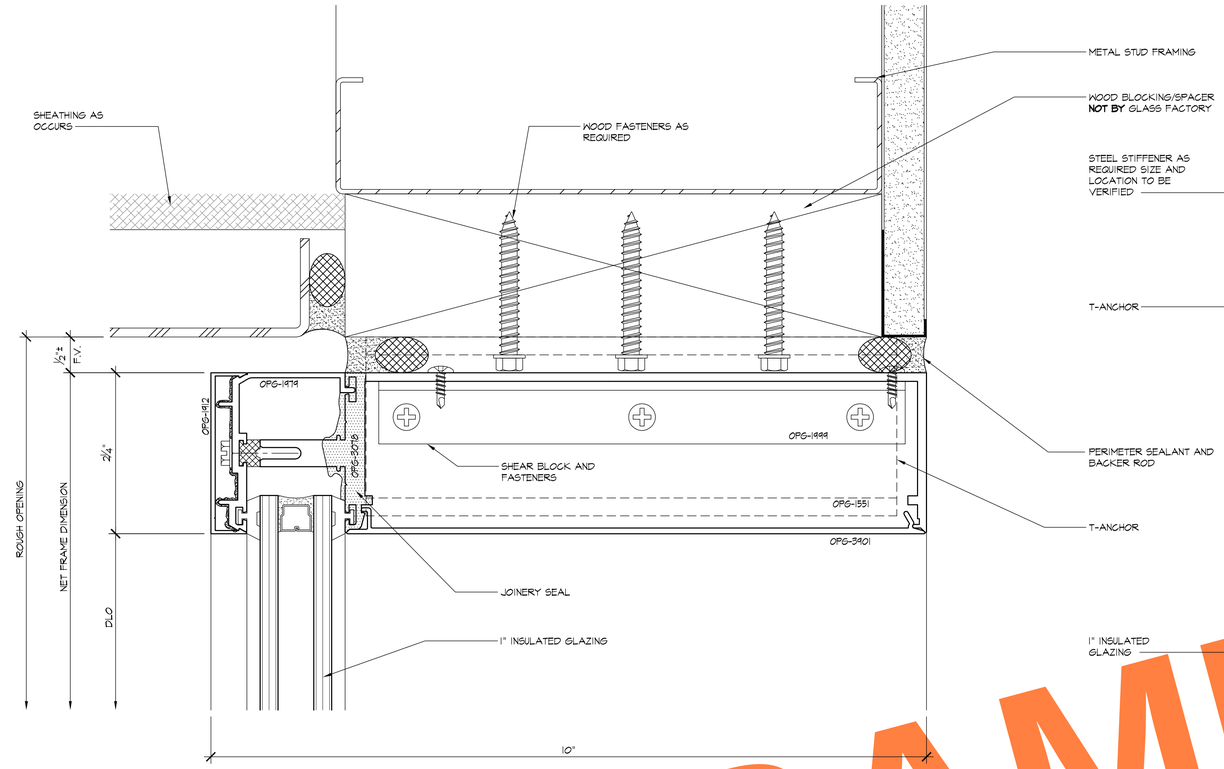

1 / 5.13 HEAD
ARCH'L: 2/A12.2a SIM.

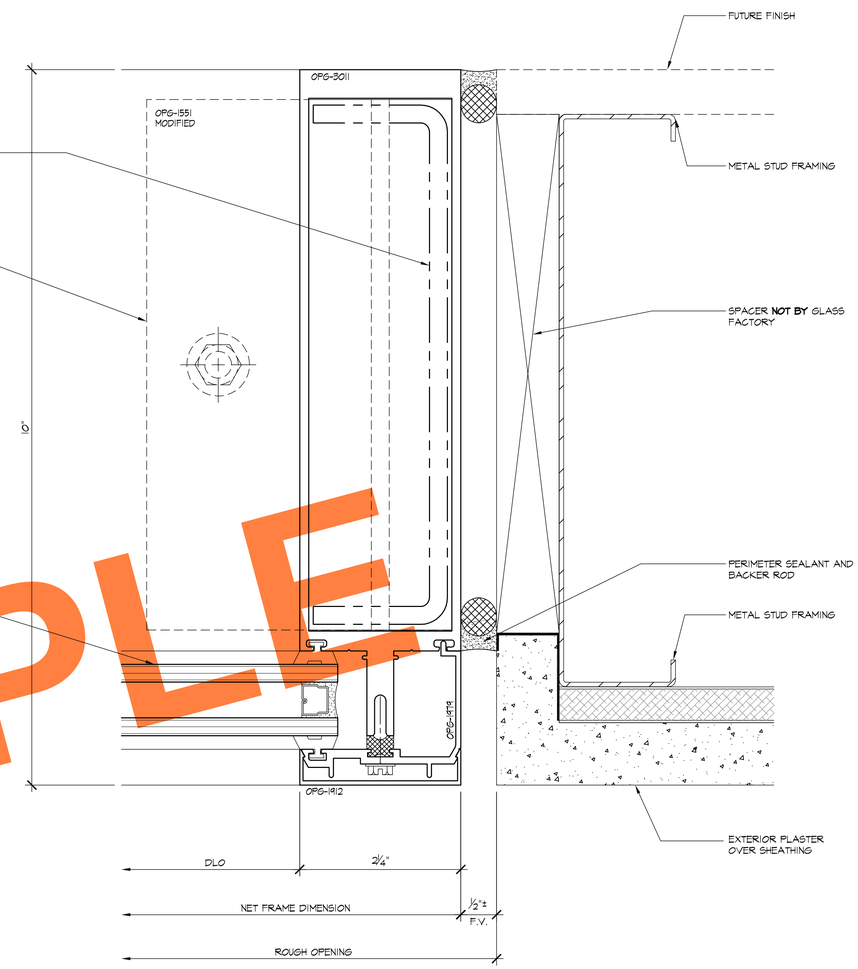

3 / 5.13 JAMB
ARCH'L: 2/A12.2a SIM.

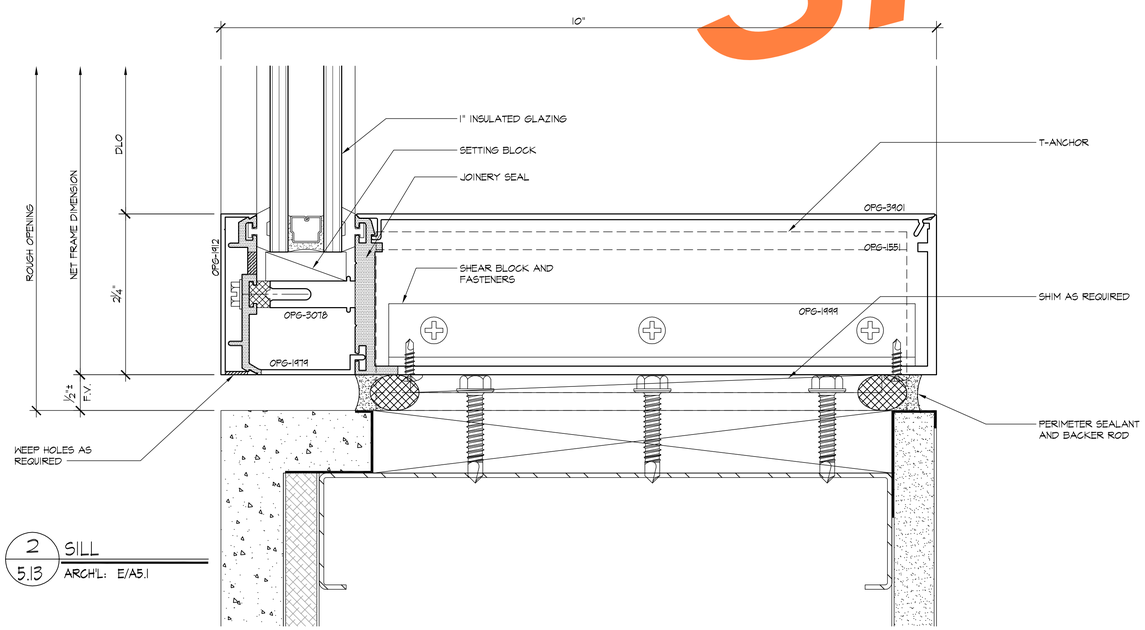

2 / 5.13 SILL
ARCH'L: E/A5.1

SAMPLE

REVISIONS	BY
△	
△	
△	
△	
△	

BMR
DRAFTING SERVICE
SINCE 1988
23846 SUNNYMEAD BLVD.
SUITE #6
MORENO VALLEY, CA 92553
B: (951) 243-7614
F: (951) 243-7673

GLASS FACTORY
26383 BASE LINE
HIGHLAND, CA 92346

JOB NAME: INLAND REGIONAL CENTER BTS
ARCHITECT: WARE MALCOMB
SHEET DESCRIPTION: DETAILS

DATE: 10-30-08
SCALE: FULL
DRAWN: MAC/BMR
JOB NO: 068-08
SHEET NO: 5.13

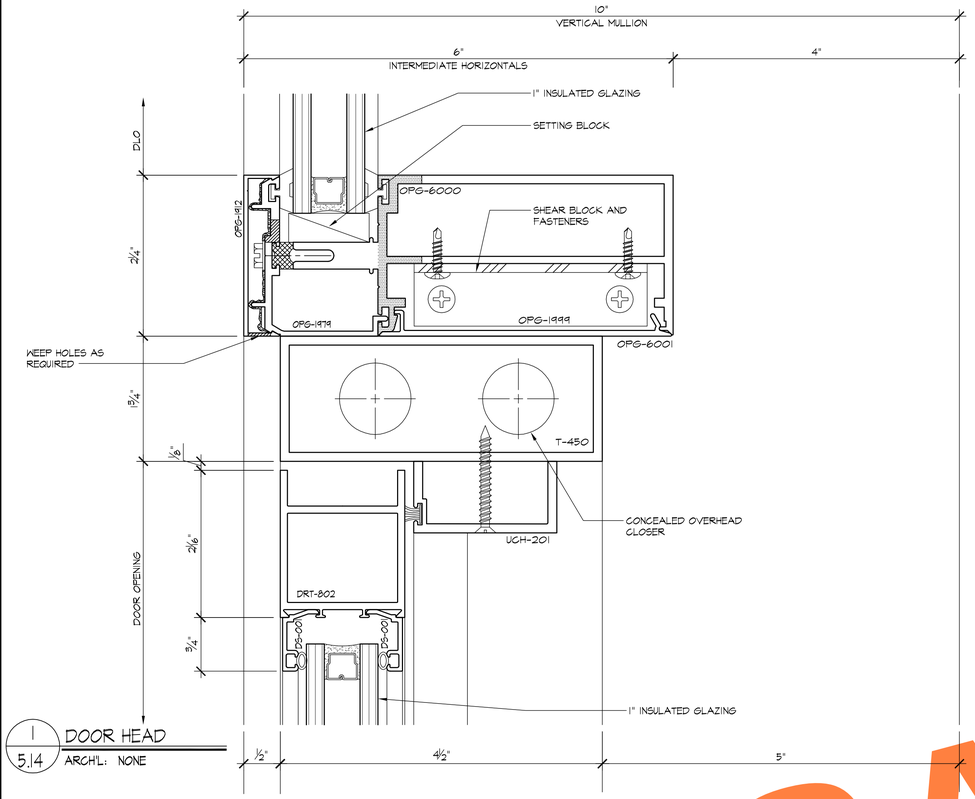

1 / 5.14 DOOR HEAD
ARCH'L: NONE

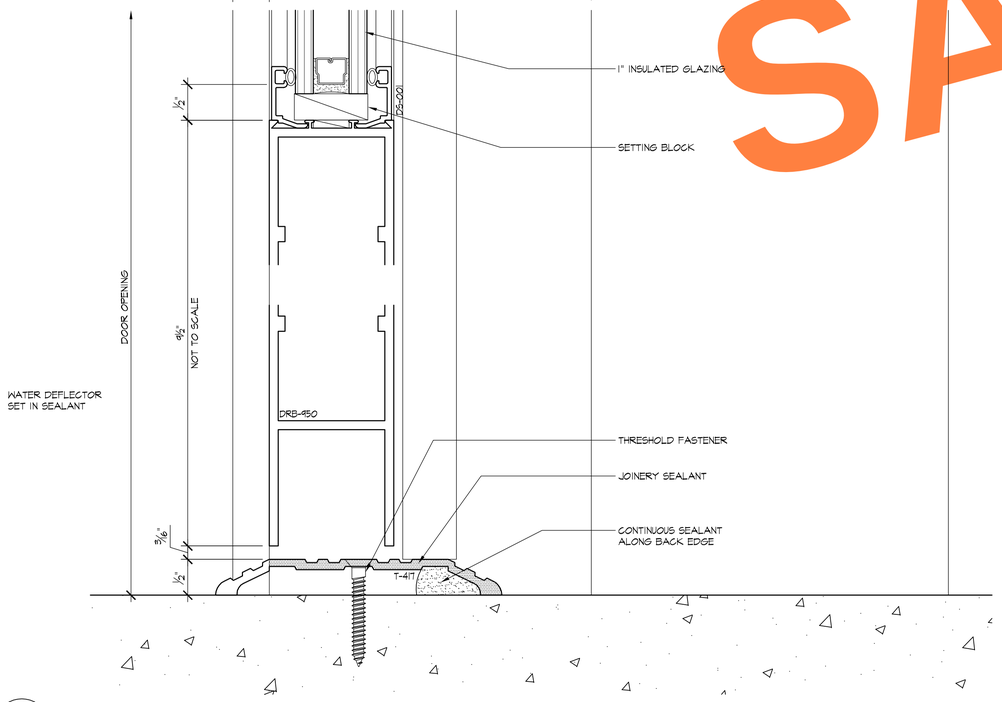

2 / 5.14 DOOR SILL
ARCH'L: NONE

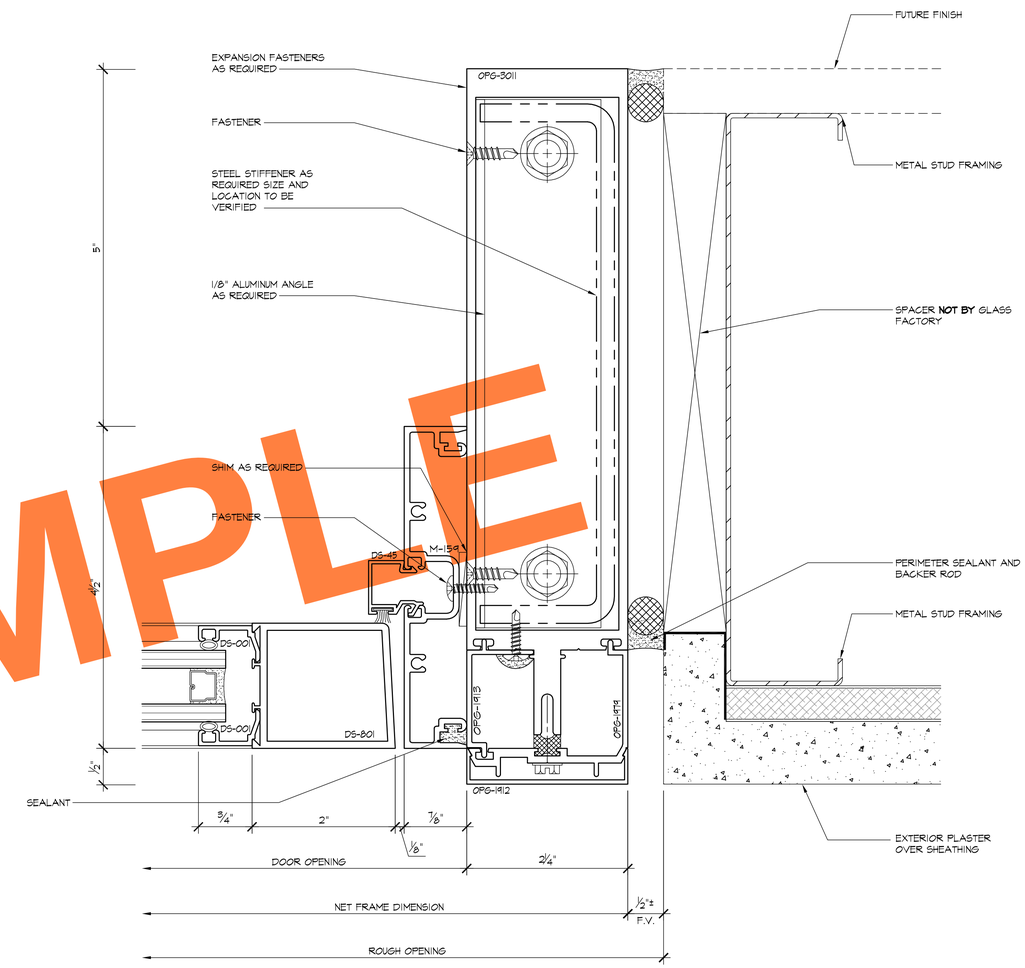

3 / 5.14 DOOR JAMB
ARCH'L: NONE

SAMPLE

REVISIONS	BY
△	
△	
△	
△	
△	

BMR
DRAFTING SERVICE
SINCE 1988
23846 SUNNYMEAD BLVD.
SUITE #6
MORENO VALLEY, CA 92553
B: (951) 243-7614
F: (951) 243-7673

GLASS FACTORY
26383 BASE LINE
HIGHLAND, CA 92346

JOB NAME: INLAND REGIONAL CENTER BTS
ARCHITECT: KARE MALCOMB
SHEET DESCRIPTION: DETAILS

DATE: 10-30-08
SCALE: FULL
DRAWN: MAC/BMR
JOB NO: 068-08
SHEET NO: 5.14

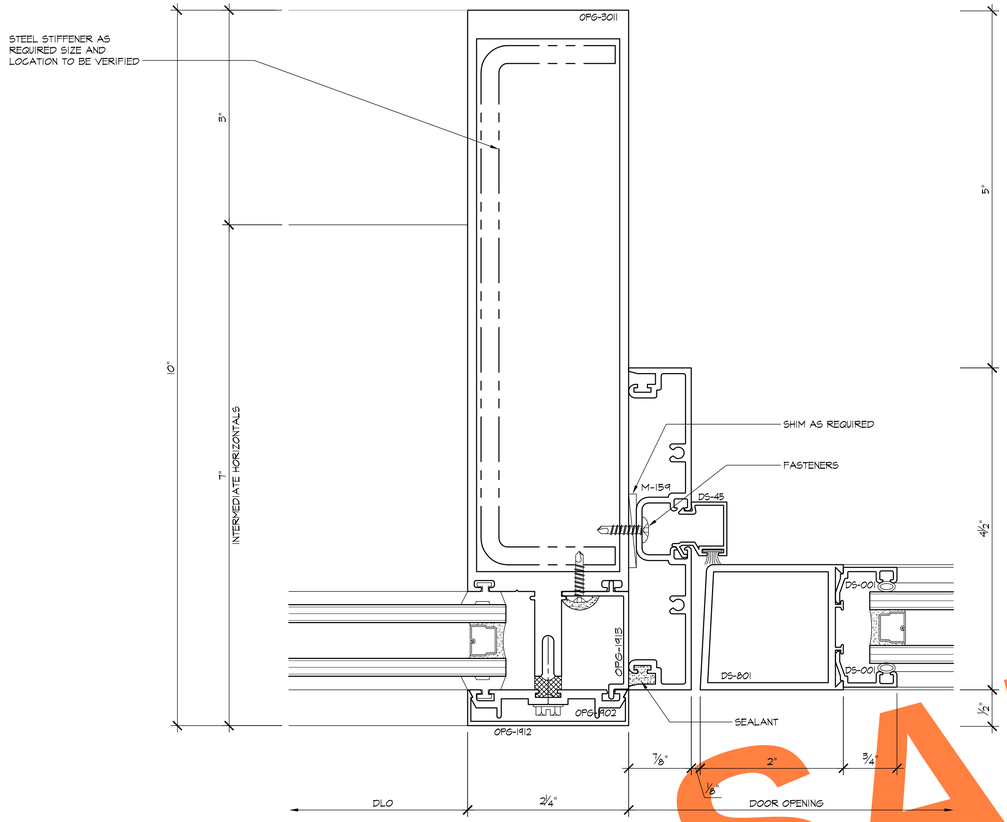

1 / 5.15 DOOR JAMB
ARCH'L: NONE

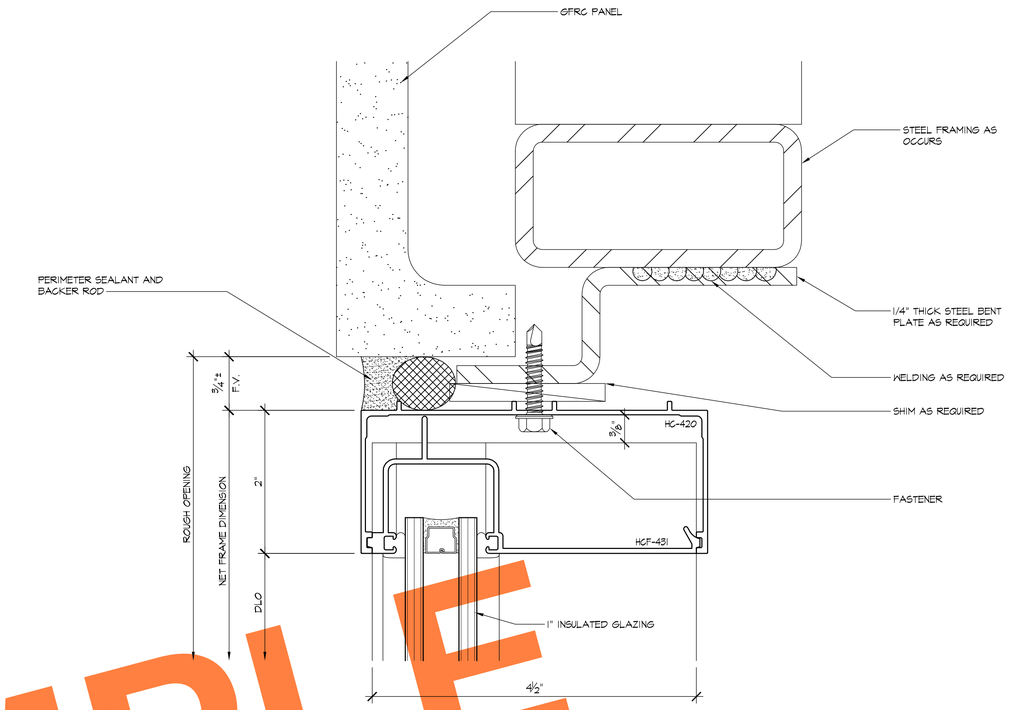

3 / 5.5 HEAD
ARCH'L: 11/A12.4a

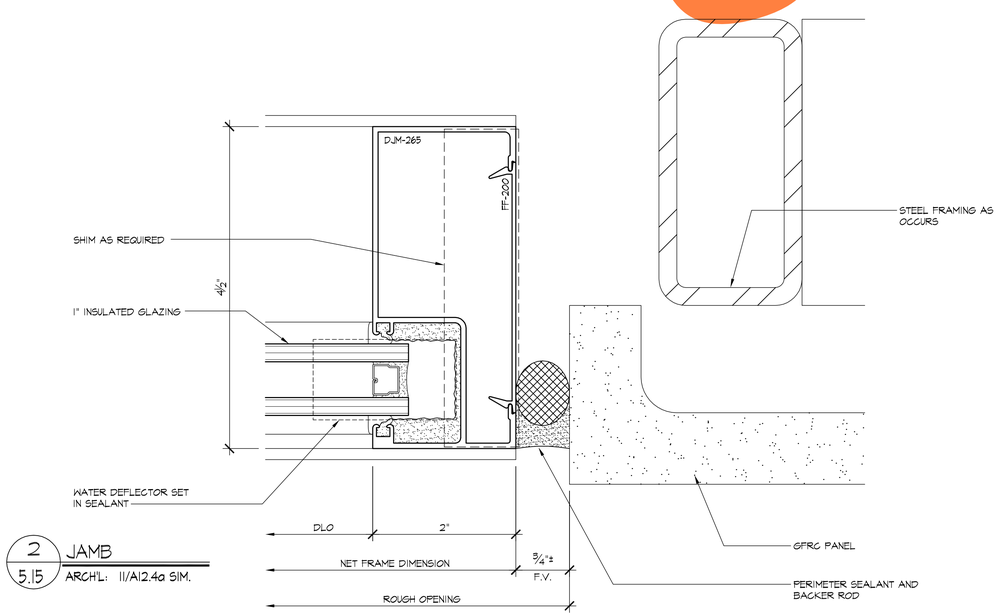

2 / 5.15 JAMB
ARCH'L: 11/A12.4a SIM.

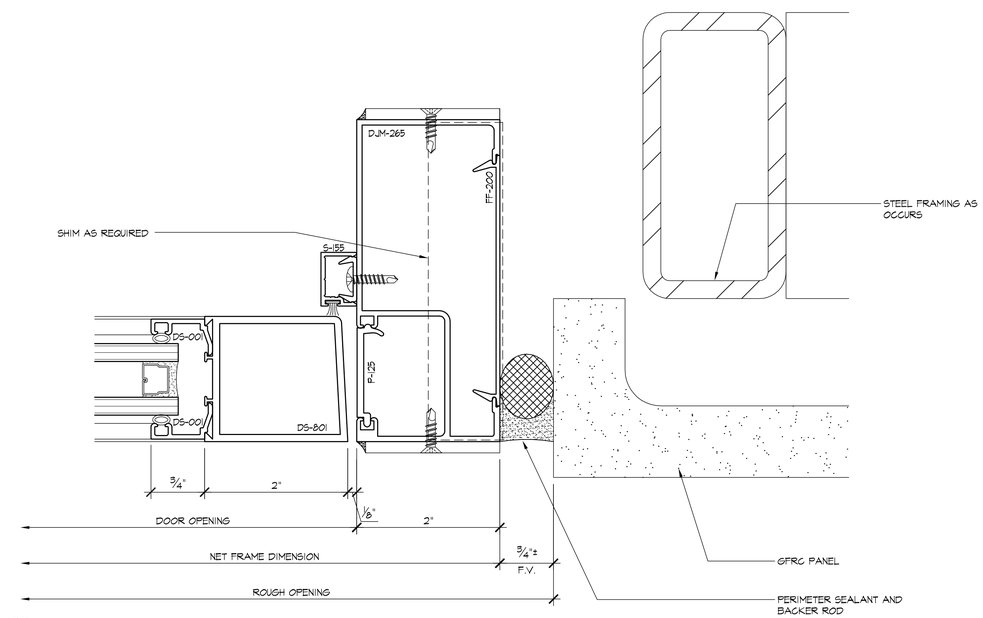

4 / 5.15 DOOR JAMB
ARCH'L: 11/A12.4a SIM.

SAMPLE

REVISIONS	BY
△	
△	
△	
△	
△	

BMR
DRAFTING SERVICE
SINCE 1988
23846 SUNNYMEAD BLVD.
SUITE #6
MORENO VALLEY, CA 92553
B: (951) 243-7614
F: (951) 243-7673

GLASS FACTORY
26383 BASE LINE
HIGHLAND, CA 92346

JOB NAME: INLAND REGIONAL CENTER BTS
ARCHITECT: WARE MALCOMB
SHEET DESCRIPTION: DETAILS

DATE: 10-30-08
SCALE: FULL
DRAWN: MAC/BMR
JOB NO: 068-08
SHEET NO: 5.15

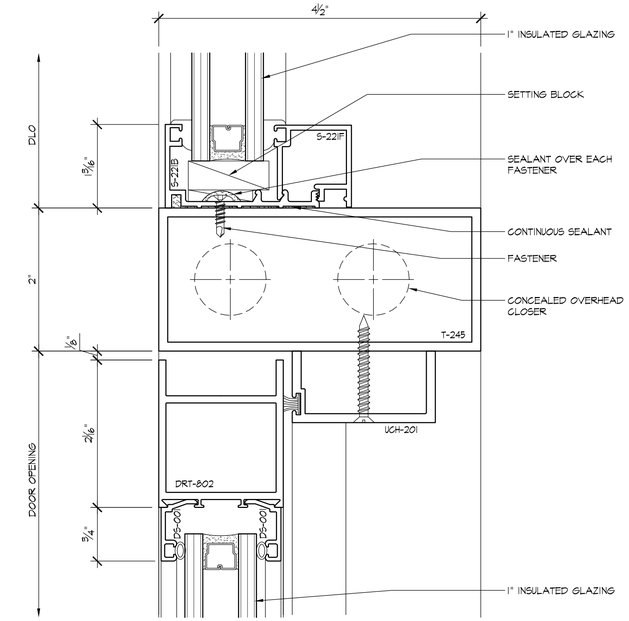

1 / 5.16 DOOR HEAD
ARCH'L: 3/A12.4

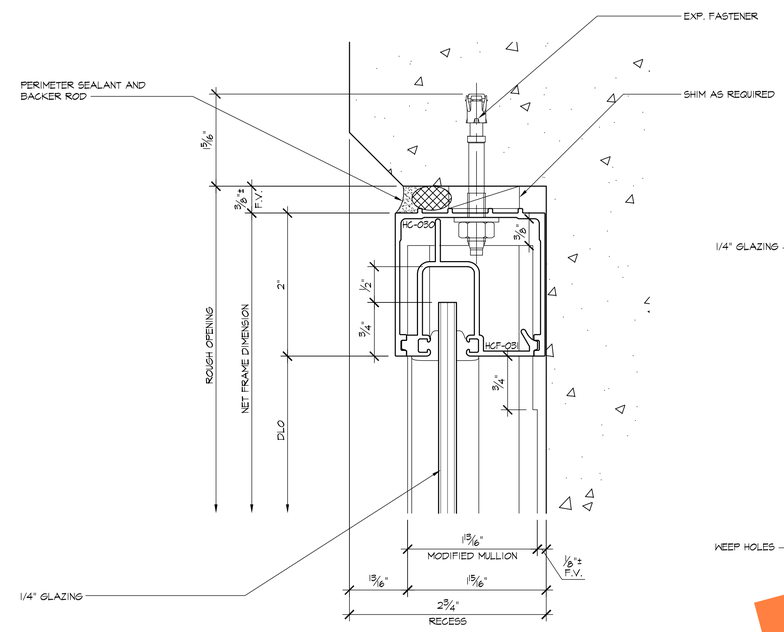

3 / 5.16 HEAD
ARCH'L: 11/A12.4

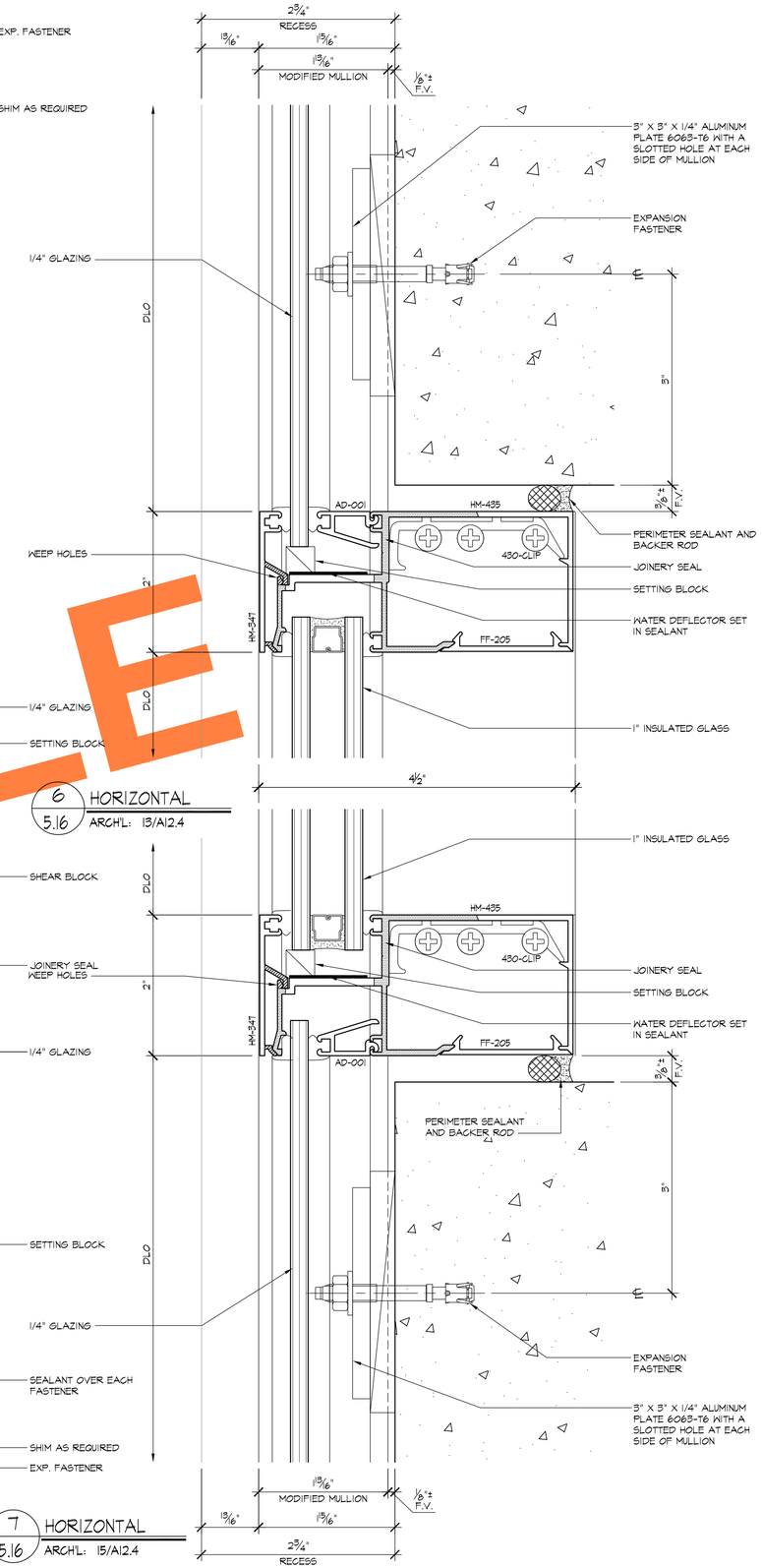

6 / 5.16 HORIZONTAL
ARCH'L: 13/A12.4

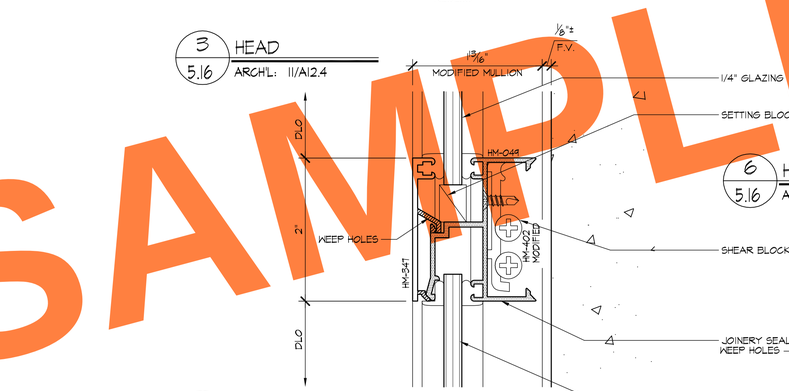

4 / 5.16 HORIZONTAL
ARCH'L: 12/A12.4

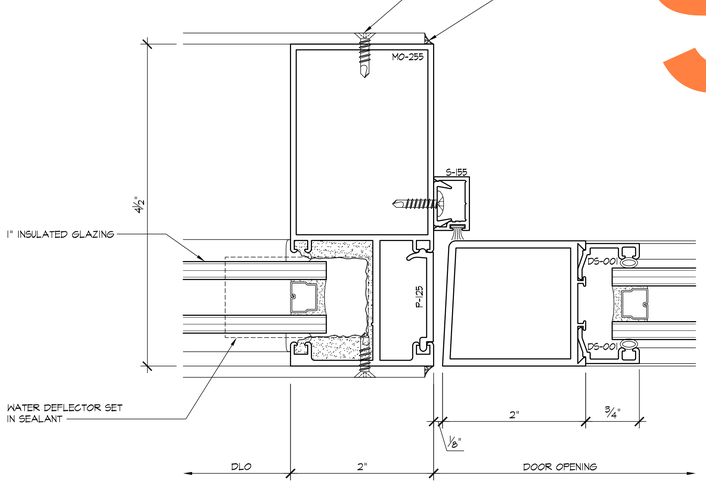

2 / 5.16 DOOR JAMB
ARCH'L: NONE

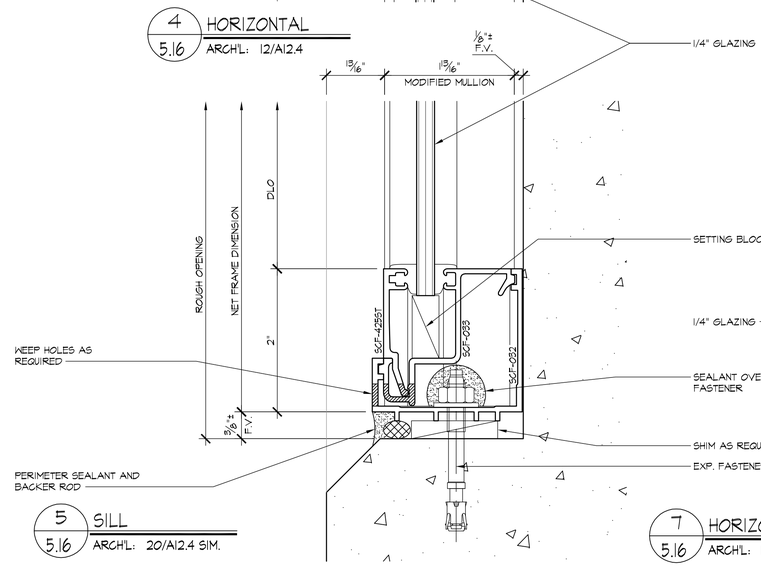

5 / 5.16 SILL
ARCH'L: 20/A12.4 SIM.

7 / 5.16 HORIZONTAL
ARCH'L: 15/A12.4

SAMPLE

REVISIONS	BY
△	
△	
△	
△	
△	

BMR
DRAFTING SERVICE
SINCE 1988
23846 SUNNYMEAD BLVD.
SUITE #6
MORENO VALLEY, CA 92553
B: (951) 243-7614
F: (951) 243-7673

GLASS FACTORY
26383 BASE LINE
HIGHLAND, CA 92346

JOB NAME: INLAND REGIONAL CENTER BTS
ARCHITECT: WARE MALCOMB
SHEET DESCRIPTION: DETAILS

DATE: 10-30-08
SCALE: FULL
DRAWN: MAC/BMR
JOB NO: 068-08
SHEET NO: 5.16

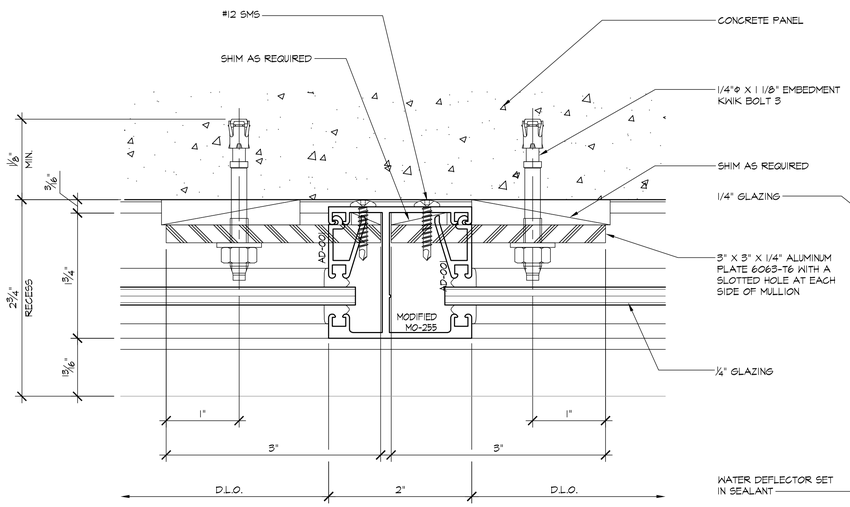

1 / 5.17 VERTICAL
ARCH'L: 12/A12.4

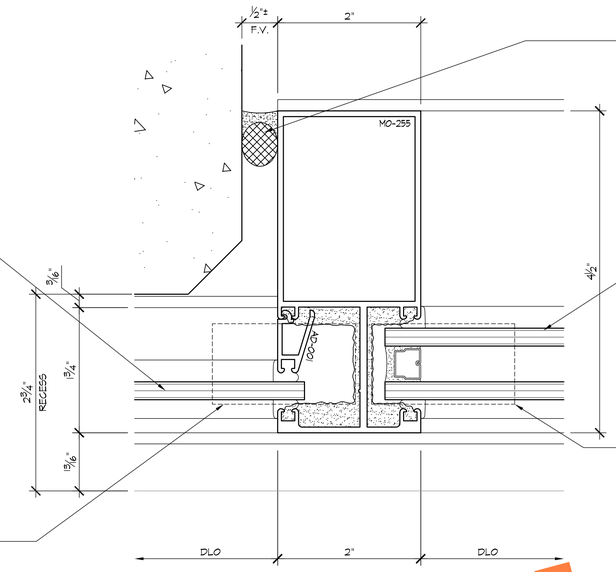

3 / 5.17 VERTICAL
ARCH'L: NONE

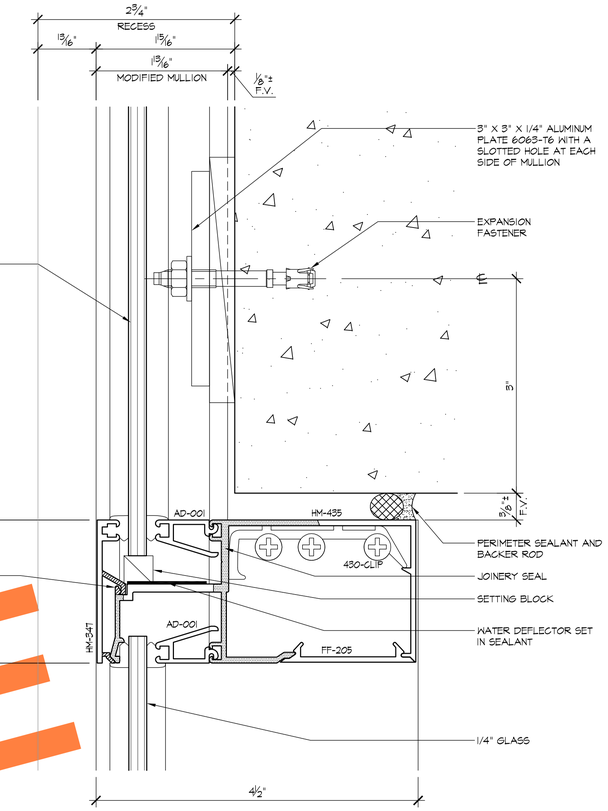

5 / 5.17 HORIZONTAL
ARCH'L: 18/A12.4

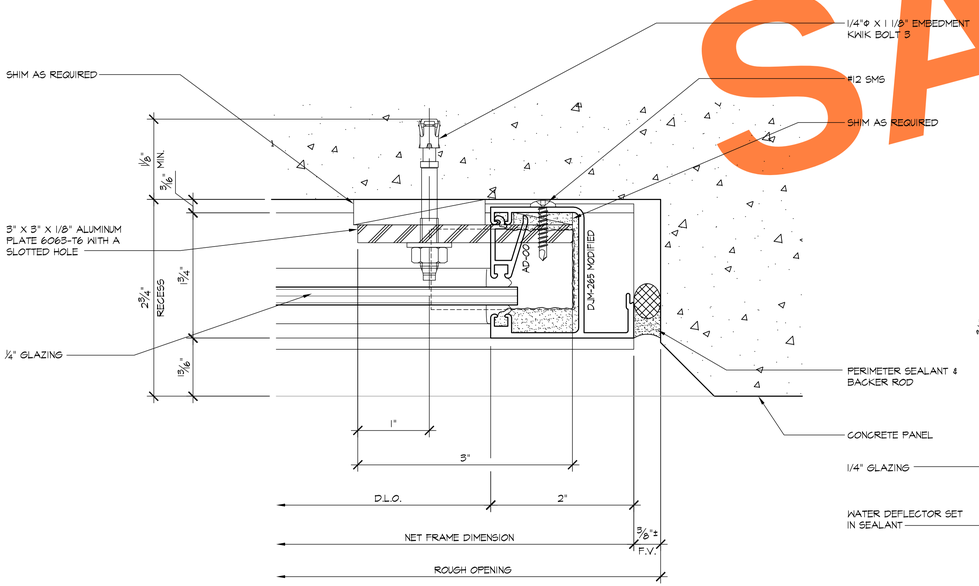

2 / 5.17 JAMB
ARCH'L: 11/A12.4A

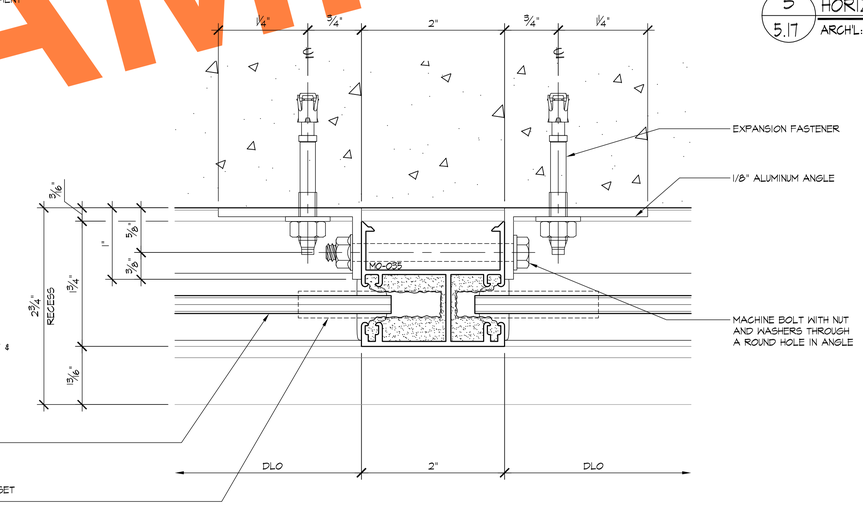

4 / 5.17 VERTICAL
ARCH'L: 12/A12.4

SAMPLE

REVISIONS	BY
△	
△	
△	
△	
△	

BMR
DRAFTING SERVICE
SINCE 1988
23846 SUNNYMEAD BLVD.
SUITE #6
MORENO VALLEY, CA 92553
B: (951) 243-7614
F: (951) 243-7673

GLASS FACTORY
26383 BASE LINE
HIGHLAND, CA 92346

JOB NAME: INLAND REGIONAL CENTER BTS
ARCHITECT: WARE MALCOMB
SHEET DESCRIPTION: DETAILS

DATE: 10-30-08
SCALE: FULL
DRAWN: MAC/BMR
JOB NO: 068-08
SHEET NO: 5.17

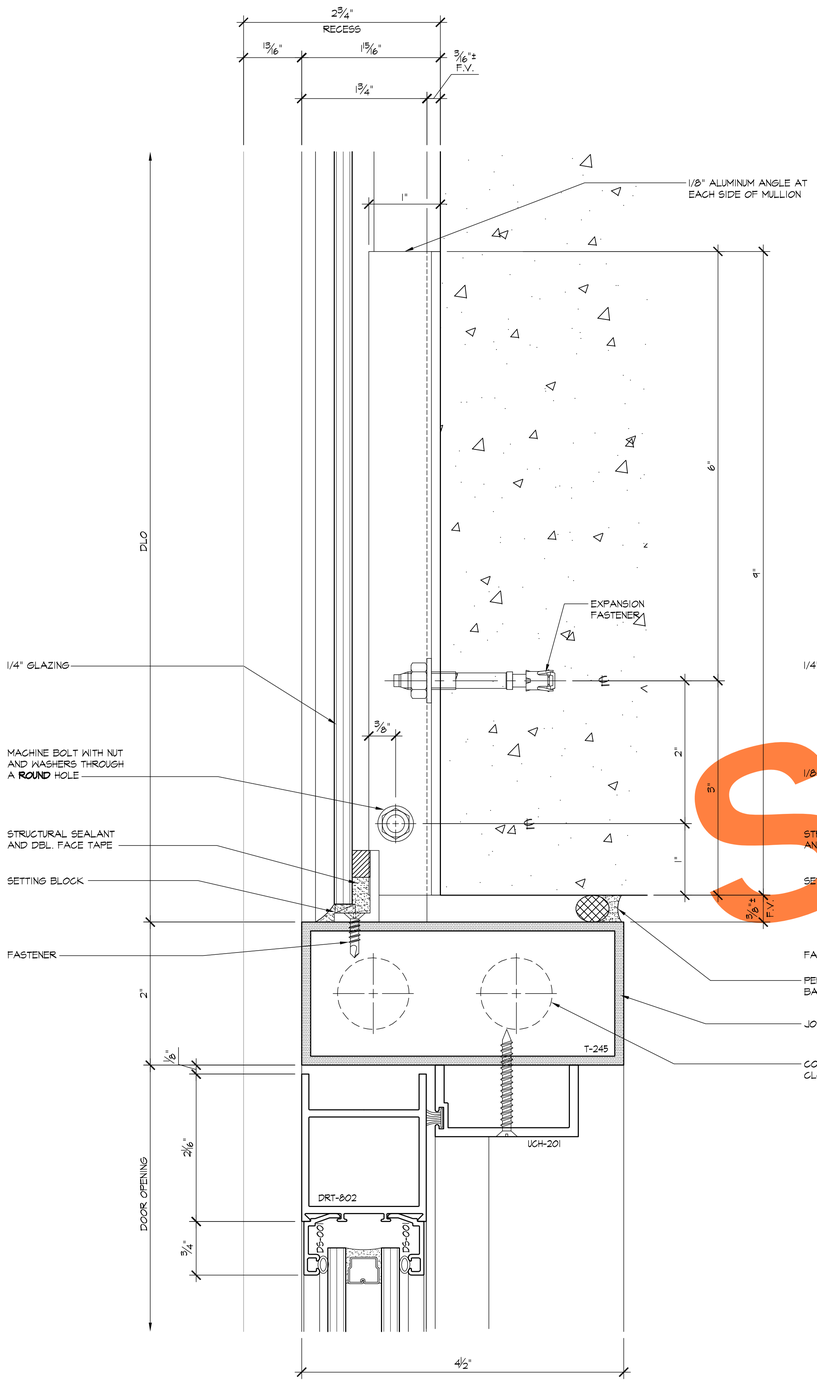

1 / 5.18 HORIZONTAL
ARCH'L: 18/A12.4

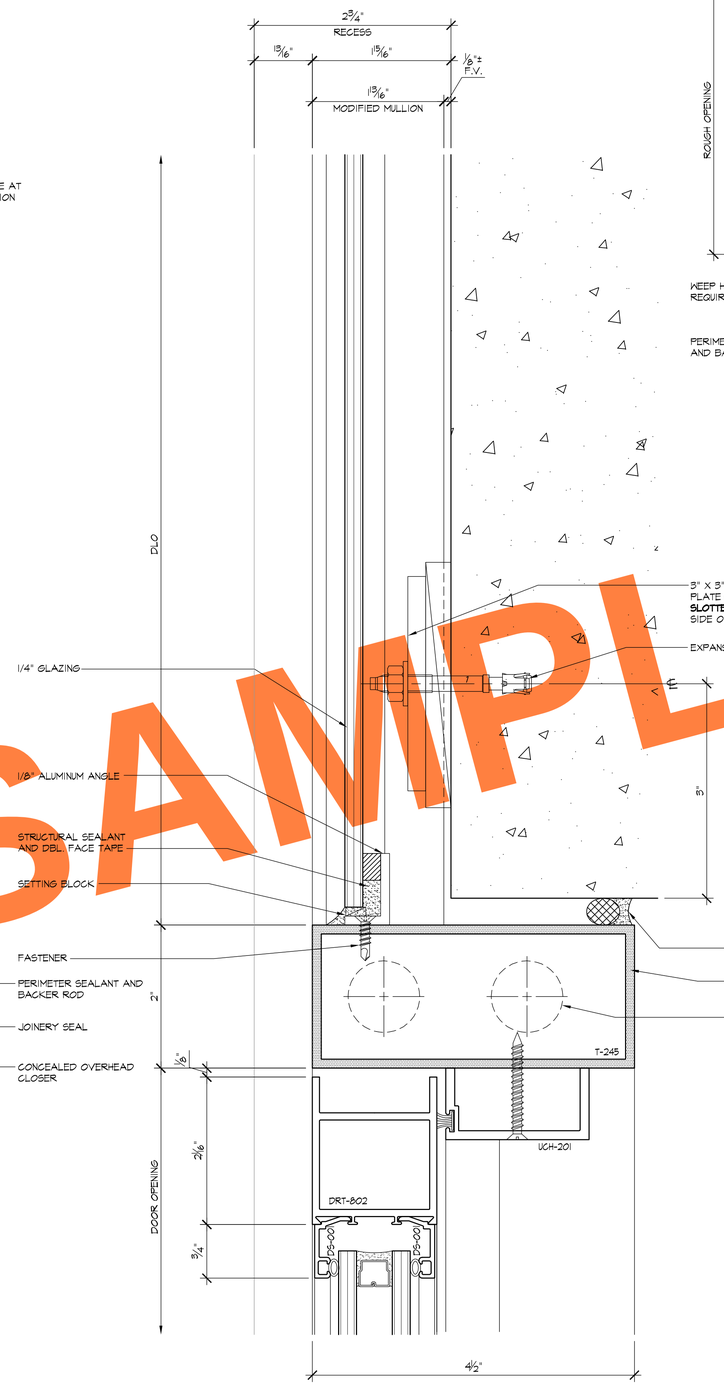

2 / 5.18 HORIZONTAL
ARCH'L: 18/A12.4

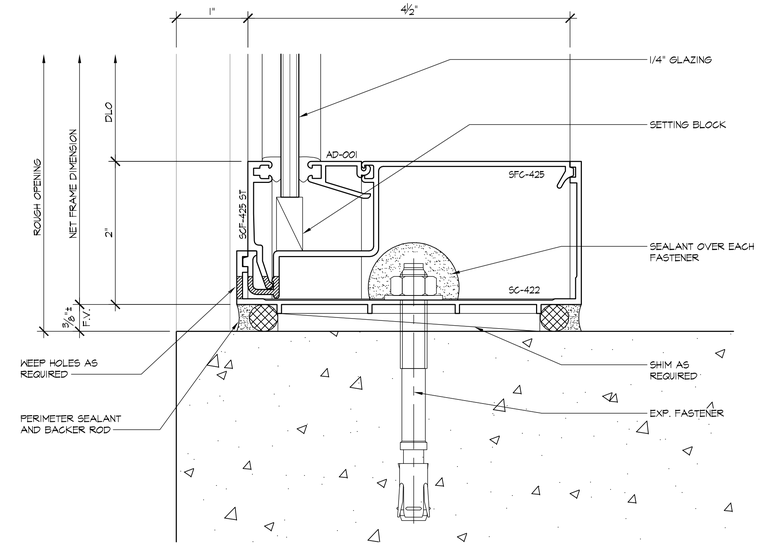

3 / 5.18 SILL
ARCH'L: 25/A12.4 SIM.

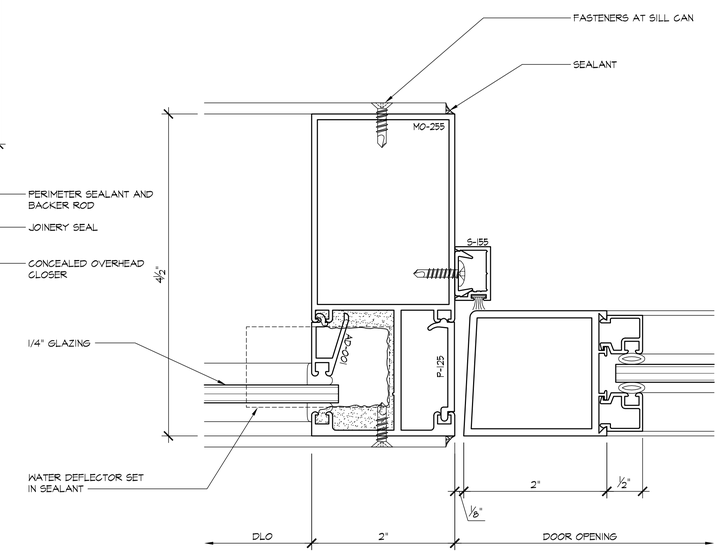

4 / 5.18 DOOR JAMB
ARCH'L: 5/12.4 SIM.

SAMPLE

REVISIONS	BY
△	
△	
△	
△	
△	

BMR
DRAFTING SERVICE
SINCE 1988
23846 SUNNYMEAD BLVD.
SUITE #6
MORENO VALLEY, CA 92553
B: (951) 243-7614
F: (951) 243-7673

GLASS FACTORY
26383 BASE LINE
HIGHLAND, CA 92346

JOB NAME: INLAND REGIONAL CENTER BTS
ARCHITECT: WARE MALCOMB
SHEET DESCRIPTION: DETAILS

DATE: 10-30-08
SCALE: FULL
DRAWN: MAC/BMR
JOB NO: 068-08
SHEET NO: 5.18

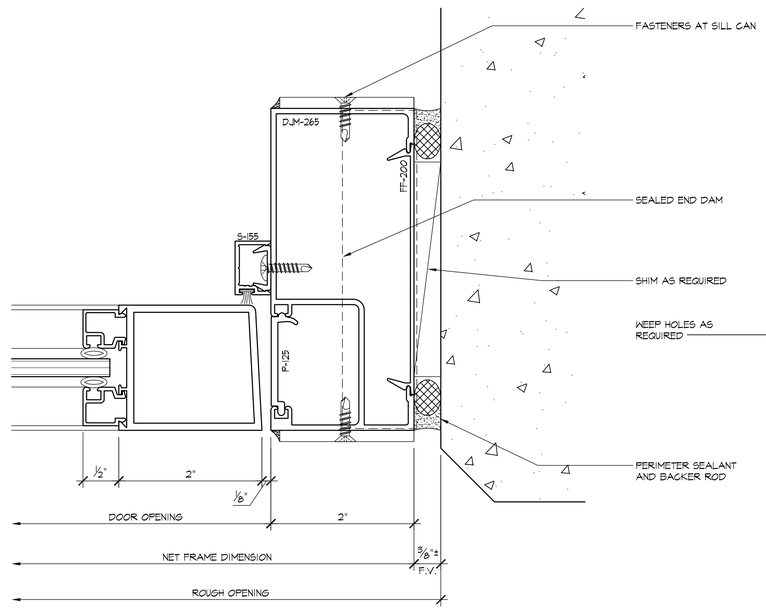

1 / 5.19 DOOR JAMB
ARCH'L: 4/A12.4 SIM.

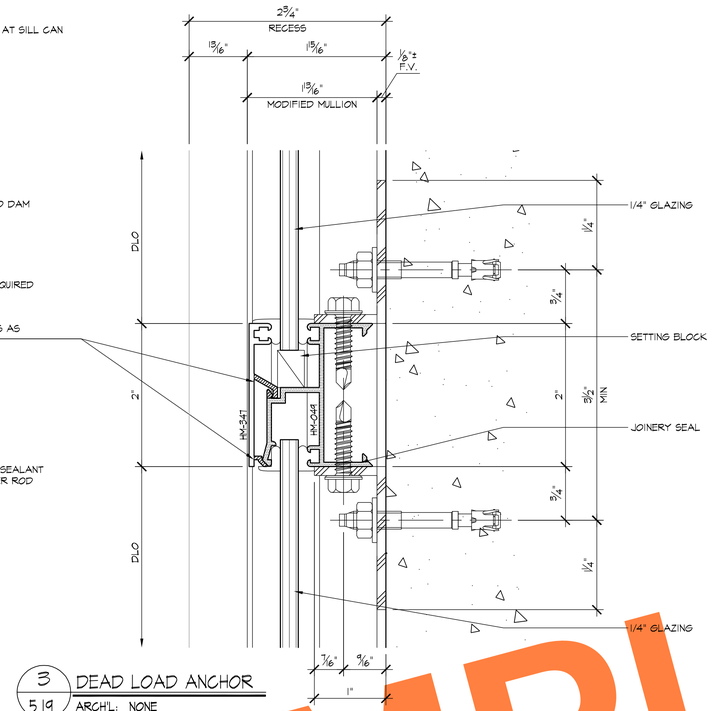

3 / 5.19 DEAD LOAD ANCHOR
ARCH'L: NONE

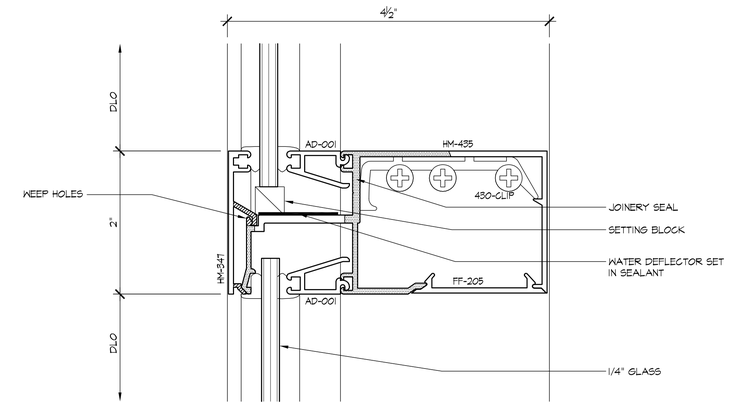

5 / 5.19 HORIZONTAL
ARCH'L: NONE

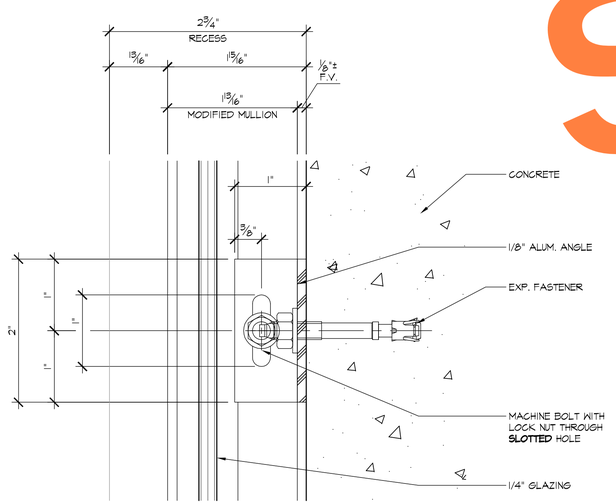

2 / 5.19 WIND LOAD ANCHOR
ARCH'L: NONE

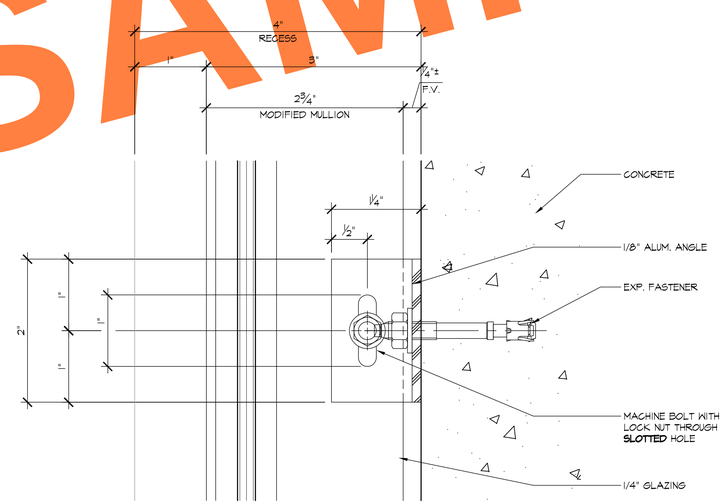

4 / 5.19 WIND LOAD ANCHOR
ARCH'L: NONE

SAMPLE

REVISIONS	BY
△	
△	
△	
△	
△	

BMR
DRAFTING SERVICE
SINCE 1988
23846 SUNNYMEAD BLVD.
SUITE #6
MORENO VALLEY, CA 92553
B: (951) 243-7614
F: (951) 243-7673

GLASS FACTORY
26383 BASE LINE
HIGHLAND, CA 92346

JOB NAME: INLAND REGIONAL CENTER BTS
ARCHITECT: WARE MALCOMB
SHEET DESCRIPTION: DETAILS

DATE: 10-30-08
SCALE: FULL
DRAWN: MAC/BMR
JOB NO: 068-08
SHEET NO: 5.19